HANDBOOK OF WEIGHTS & MEASURES

ROBERTS

Henry Pooley & Son, Ltd.,

ORIGINAL PATENTEES AND SOLE MAKERS OF

POOLEY PLATFORM **Weighing Machines and Weighbridges.**

AWARDED OVER SIXTY PRIZE MEDALS.

CONTRACTORS FOR MAINTENANCE.

NINE-TENTHS of the Railway Traffic of Great Britain and Ireland is weighed on Pooley Machines.

Head Office:

TEMPLE STREET, BIRMINGHAM.

HIGHEST AWARDS
WHEREVER EXHIBITED.

**ESTABLISHED
1670.**

Telegraphic Address:
"DEGRAVE, LONDON."
Telephone No. 2231 CENTRAL.

DE GRAVE, SHORT & Co.,

LIMITED,

13, FARRINGDON ROAD, LONDON,
E.C.

MANUFACTURERS OF—

**Bullion, Assay & Chemical Balances,
Scales, Weights, Measures, &c.,**

TO HIS MAJESTY'S STANDARDS DEPT.,
BOARD OF TRADE, ROYAL AND COLONIAL MINTS,
GENERAL POST OFFICE, INDIAN, CANADIAN,
AND EGYPTIAN GOVERNMENTS, ETC.

Standard Scales
Weights & Measures

For COUNTY COUNCILS
And CORPORATIONS.

OUR BALANCES ARE USED BY

THE ADMIRALTY. WAR OFFICE. BOMBAY MINT. SYDNEY MINT.
PERTH MINT. MELBOURNE MINT. STOCKHOLM MINT.
LIMA MINT. OTTAWA MINT. HYDERABAD MINT, &c., &c.

**SCALES AND WEIGHING MACHINES OF EVERY DESCRIPTION,
WITH ENGLISH AND FOREIGN WEIGHTS FOR EXPORTATION.**

Digitized by the Internet Archive
in 2026

https://archive.org/details/weightsmeasures0000jame

6.3.26
145-694
Rob

WEIGHTS AND MEASURES.

KN 282.5 ROB

BY THE SAME AUTHOR.

THE GRANT AND VALIDITY OF BRITISH PATENTS FOR INVENTIONS.

LONDON: JOHN MURRAY, ALBEMARLE ST., W.

BY THE SAME AUTHOR AND
H. FLETCHER MOULTON, ESQ.,
Of the Middle Temple, Barrister-at-Law.

THE PATENTS AND DESIGNS ACT, 1907,
WITH NOTES.

LONDON: BUTTERWORTH & CO.,
11 & 12, BELL YARD, TEMPLE BAR, W.C.

WEIGHTS AND MEASURES;

BEING THE

WEIGHTS AND MEASURES ACTS, 1878 TO 1904;

THE BOARD OF TRADE REGULATIONS, 1907;

STATUTORY PROVISIONS RELATING TO THE SALE OR CHECKING OF VARIOUS COMMODITIES BY WEIGHT OR MEASURE;

TOGETHER WITH THE

PRINCIPLES OF WEIGHING AND MEASURING.

BY

JAMES ROBERTS, ESQ., M.A., LL.B.,

Sen. Moderator and Gold Medallist in Experimental Science, Trinity College, Dublin, and of

THE INNER TEMPLE, BARRISTER-AT-LAW,

Associate of the Institution of Electrical Engineers,

Author of the Grant and Validity of British Patents for Inventions.

THIRD EDITION.

LONDON:

CHAS. KNIGHT & CO., LTD., 227–239, TOOLEY ST., S.E.

DUBLIN:

HANNA & NEALE, 18, NASSAU STREET.

1908.

[*All rights reserved.*]

PRINTED BY
WILLIAM CLOWES AND SONS, LIMITED,
LONDON AND BECCLES.

PREFACE TO THE THIRD EDITION.

SINCE the second edition of this book was published in 1899 a fundamental change has been made by the Act of 1904 in the administration of the Weights and Measures Acts. To appreciate this change one must bear in mind the trend and effect of previous legislation.

Uniformity in the use of weights and measures has been the object of many laws since the date of Magna Charta. Comparison of weights and measures with the standards dates from 1351, and stamping correct weights and measures from 1433. A large number of Acts in force in 1878 were consolidated in the Weights and Measures Act of that year.

Prior to the passing of that Act the Local Authorities of the day could provide and use any denominations of standards that were aliquot parts or multiples of the Imperial pound, gallon, or yard. As a consequence of these independent powers of the Local Authorities some denominations of standards were legal in some counties and illegal in others.

The inconvenience created by this difference in administration was removed by the Act of 1878, which enacted that any article stamped under the Acts then repealed should be legal throughout the United Kingdom. The Act also provided that certain denominations of standards were declared legal, and power was given to the Board of Trade, by Order in Council, to make new denominations of standards as might from time to time appear to it to be required. The question whether the Board acts in this respect ministerially

subject to the requirements of the Local Authorities, or is the sole arbiter as to what is required, is, in the Author's opinion, still an open one, depending on the construction of the Acts as a whole.

The main object of the Act of 1889 was to bring weighing instruments under the examination and control of the Inspectors of Weights and Measures and the Local Authorities. But this object was carried out in a retrograde manner, as the duty of making regulations as to the testing and stamping of weighing instruments was cast on the Local Authorities. Questions relating to the prohibition of stamping instruments so constructed as to facilitate the commission of fraud—the allowances for sensitiveness, or the like—were to be determined independently by them. Appliances could be stamped in one county which would have been rejected in another. To meet this objection the Board of Trade issued "Model Regulations" to assist the Local Authorities in framing their own. It was the perusal of a report of a deputation to the Board of Trade on January 3, 1890, on this matter, that suggested to the Author the writing of this book. It was primarily intended for the assistance of the Inspectors of Weights and Measures that this book was first published in 1891.

The Act of 1897, regulating the use of Metric Weights and Measures, and other amending Acts, were followed by the Act of 1904, which reversed the policy of decentralization of the Act of 1889, and made the Board of Trade the authority to decide what types of weighing instruments shall be allowed, the limits of their sensitiveness, and the correctness of any weight or measure. For this purpose the Board issues Regulations which are binding on the Inspectors, although they still remain the officials of the Local Authorities. It seems to the Author that it will only be a matter of time until further legislation will form a branch of the Board of

Trade for the administration of these Acts, and charge the cost on the Imperial Exchequer.

Although the original need for the first part of this book has been diminished by these changes in administration, it has been retained and enlarged. It has been largely used by candidates for inspectorships; and also by those connected with the manufacture of weighing appliances, who required a knowledge of the principles upon which they are constructed, not only at home but in the United States. For the improvement of the book in this respect I am indebted to Mr. R. Sparrow, D.I., R.I.C., who made valuable suggestions, and to Mr. J. M. McGrath (of Messrs. Avery, Ltd.) for the corresponding illustrations. Other additional matter has been introduced to elucidate points of difficulty that were brought to light by the discussion on the New Regulations at the Autumn Meeting of the Incorporated Society of Inspectors. The Author has been favoured by the kind suggestions and criticism of Mr. G. W. Davis, who also made a large number of drawings to illustrate the additional matter.

The necessary inclusion of the Regulations and recent Orders in Council has much enlarged the size of the book. Some of the other Acts relating to the sale of goods by weight or measure have been given more fully, and all have been fully noted with cases up to date. References have been given in the Table of Cases to Allwood's "Appeal Cases." It is hoped that this book may now be regarded as complete.

JAMES ROBERTS.

1, Paper Buildings, E.C.
June, 1908.

ACKNOWLEDGMENTS.

To Major P. MacMahon, R.E., F.R.S., Deputy Warden of the Standards, for certain Orders in Council, and of the Board of Trade.

To Mr. J. Ollis, Public Control Department, L.C.C., for suggestions, forms, and the *Monthly Review*.

To Mr. R. Sparrow, D.I., R.I.C., for suggestions on the educational portion of the book.

To Mr. G. W. Davis, for suggestions, corrections, and illustrations numbered 19, 20, 23, 24, 26, 27, 34, 35, 36, 38, 39, 41, 42, and 43.

To Mr. McGrath (of Messrs. Avery, Ltd.), for suggestions as to weighbridges and illustrations numbered 21, 32, 33, and 37.

To the following gentlemen for calling the Author's attention to various points: Messrs. G. F. Allwood, F. Bolshaw, A. J. Bruce, S. Cooper, W. H. Crabtree, H. Cunliffe, E. Foxe, A. Hayley, T. Kyle, T. Latham, R. K. Reid, and J. P. Stubbs, A.M.I.C.E.

Acknowledgments of previous assistance will be found in earlier editions.

CONTENTS.

PAGE

Abbreviations xi

Table of Cases xii

Table of Statutes xvii

CHAPTER I.

Principles of Weighing 1

CHAPTER II.

Principles of Construction of Weighing Instruments . 21

CHAPTER III.

Principles involved in measuring Capacities . . . 97

CHAPTER IV.

The Metric System 117

CHAPTER V.

Administration 126

STATUTES.

The Weights and Measures Act, 1878 143

The Weights and Measures Act, 1889 210

The Weights and Measures (Purchase) Act, 1892 . . 236

The Weights and Measures Act, 1893 238

PAGE

The Weights and Measures (Metric System) Act, 1897 . 239

The Weights and Measures Act, 1904 240

The Regulations of the Board of Trade 250

The Application of those Acts to Coal Mines and Factories 329

The Sale of Bread 331

The Sale of Coal (Metropolis) 340

The Sale of Bread and Coal (Scotland) 346

Provisions relating to the Excise 352

The Sale of Hops 354

The Sale of Intoxicating Liquors 363

Markets and Fairs 365

Mills 376

Local Government 376

Merchant Shipping, etc. 378

Merchandise Marks 379

Herring Fishery (Scotland) 389

Special Provisions as to Ireland 390

Aiding and Abetting 393

APPENDIX—

Recognizance 394

Fees under sect. 6 of Act of 1904 394

Fees at Standards Office 396

Errors in Local Standards 397

Forms 402

Addenda of Recent Cases 405

INDEX 407

ABBREVIATIONS.

The following abbreviations are used in the Table of Cases and throughout this work:—

All.	Appeal Cases, etc., by G. F. Allwood.
B. & S.	Best and Smith's Reports.
C. B.	Common Bench Reports.
C. B., N. S.	Common Bench Reports (New Series).
C. & K.	Carrington and Kirwan's Reports.
Cox	Cox's Reports of Criminal Cases.
E. & B.	Ellis and Blackburn's Reports.
E. & E.	Ellis and Ellis's Reports.
Ex.	Exchequer Reports.
Ex. D.	Law Reports, Exchequer Division.
F.	Fraser and others' Scotch Reports.
H. C. J.	High Court of Justiciary, Scotland.
I. L. T. R.	Irish Law Times Reports.
I. R., C. L.	Irish Reports, Common Law.
J. P.	The Justice of the Peace.
Juris.	The Jurist.
Juris., N. S.	The Jurist, New Series.
Just. Ca.	Justiciary Cases.
K. B. D.	Law Reports, King's Bench Division.
L. J., C. P.	Law Journal Reports, Common Pleas.
L. J., Ex.	,, ,, ,, Exchequer.
L. J., M. C.	,, ,, ,, Magistrates' Cases.
L. J., Q. B.	,, ,, ,, Queen's Bench.
L. R., C. P.	Law Reports, Common Pleas.
L. R., Q. B.	,, ,, Queen's Bench.
L. T.	Law Times Reports.
L. T., O. S.	,, ,, ,, (Old Series).
M. & W.	Meeson and Welsby's Reports.
M. P. G.	Metropolitan Police Guide.
M. R.	The Monthly Review.
Q. B. D.	Law Reports, Queen's Bench Division.
Q. B.	Queen's Bench Reports.
R.	The Reports.
Sc. C. S.	Scotch Court of Session Cases.
T. L. R.	The Times Law Reports.
W. R.	The Weekly Reporter.

TABLE OF CASES.

PAGE

Addy *v.* Blake (1887) (3 M. R. 10; 19 Q. B. D. 478; 56 L. T. 711; 35 W. R. 719; 16 Cox 259; 51 J. P. 599; All. 74) . . . 363
Aerated Bread Co. *v* Gregg (1873) (L. R. 8 Q. B. 355; 42 L. J., M. C. 117; 28 L. T. 816; 37 J. P. 388; 5 M. R. 93; All. 52) . 333
Alty *v.* Farrell (1896) (4 M. R. 113; 1 Q. B. 636; 65 L. J., M. C. 115; 74 L. T. 492; 18 Cox 321; 60 J. P. 373; All. 118) . . 222
Anglo-American Oil Co. *v.* Manning (1908) (1 K. B. 536; 77 L. J. K. B. 205; 98 L. T. 570; 24 T. L. R. 215; 72 J. P. 35) 157, 180

Baker *v.* Herd (1894) (58 J. P. 413; 2 M. R. 281; All. 100) . . 226
Beardsley *v.* Pike (1904) (90 L. T. 652; 68 J. P. 273; 2 L. G. R. 710; 20 Cox 648; All. 176) 221
Bellamy *v.* Pow (1896) (60 J. P. 712; All. 127) . . 146, 150, 153
Blackledge & Sons, Ltd. *v.* Bolshaw, 24 T. L. R. 696 . . . 406
Blackshaw *v.* Swarthmoor Co-op. Soc. (1906) (M. R., May, 1906; All. 203) 333
Booth (or Brooke) *v.* Shadgett (1873) (L. R. 8 Q. B. 352; 42 L. J., M. C. 98; 29 L. T. 30; 21 W. R. 845; 37 J. P. 743; All. 51) . 156
Bridge *v.* Passman (1903) (68 J. P. 129; 11 M. R. 216; All. 168) . 333
Bridger *v.* Neilson (1894) (2 M. R. 377; 31 Sc. C. S. 744; All. 105) . 351
Budd *v.* Lucas (1891) (1 Q. B. 413; 60 L. J., M. C. 95; 64 L. T. 292; 39 W. R. 350; 55 J. P. 550; 17 Cox 248; All. 88) . 161, 381

Cameron *v.* Tyler (1899) (2 Q. B. 94; 68 L. J., Q. B. 759; 80 L. T. 764; 47 W. R. 559; 63 J. P. 567; 19 Cox 353; All. 143) . . 220
Cameron *v.* Wiggins (1901) (1 K. B. 1; 70 L. J., K. B. 15; 83 L. T. 428; 49 W. R. 237; 19 Cox 580) 384
Carr *v.* Stringer (1868) (2 M. R. 312; 3 M. R. 41; L. R. 3 Q. B. 433; 9 B. & S. 238; 37 L. J., Q. B. 168, and M. C. 120; 18 L. T. 399; 16 W. R. 859; 32 J. P. 517; All. 39) 155
Christie *v.* Cooper (1900) (2 Q. B. 522; 69 L. J., Q. B. 708; 83 L. T. 54; 49 W. R. 46; 64 J. P. 692) 382
Collins *v.* Denny (1897) (31 I. L. T. R. 167; All. 132; 14 M. R. 60) 156
Collins *v.* Hopwood (1846) (15 M. & W. 459; 16 L. J., Ex. 124; All. 5) 344
Copeland *v.* Walker (1891) (1 M. R. 122; 5 M. R. 93; 65 L. T. 262; 55 J. P. 809; 17 Cox 331; All. 93) 337

PAGE

Coppen *v.* Moore (1898) (2 Q. B. 300, 306; 67 L. J., Q. B. 689; 78 L. T. 520; 46 W. R. 573; 62 J. P. 439) 383
Cox *v.* Bleines (1902) (1 K. B. 670; 71 L. J., K. B. 437; 86 L. T. 563; 50 W. R. 392; 66 J. P. 407; 20 Cox 188; 10 M. R. 239; All. 160). 333
Crabtree *v.* Bulman (1896) (4 M. R. 152; 60 J. P. 489; 5 M. R. 32; All. 124) 246
Craig *v.* McPhee (1883) (2 M. R. 279; 10 Sc. C. S. 4th series, 51; 48 J. P. 115; 51 J. P. 323; All. 66) 150
Crick *v.* Nicholls (1905) (1 K. B. 501; 74 L. J., K. B. 283; 92 L. T. 169; 53 W. R. 431; 69 J. P. 144; 3 L. G. R. 277; 21 T. L. R. 235; All. 195) 224
Crick *v.* Theobald (1895) (3 M. R. 134; 64 L. J., M. C. 216; 72 L. J. 807; 59 J. P. 502; 15 R. 514; All. 115) 151
Cundell *v.* Dawson (1847) (4 C. B. 376; 17 L. J., C. P. 311; All. 8) 345

Daniel *v.* Whitfield (1885) (15 Q. B. D. 408; 54 L. J., M. C. 134; 53 L. T. 471; 15 Cox 762; 33 W. R. 905; 49 J. P. 694; 5 M. R. 93; All. 69) 337
Dodson *v.* Williams (1894) (M. P. G. 63; *The Times*, Aug. 10, 12, 1892 and Jan. 23, 1894; All. 102) 178
Duncan *v.* Toms (56 L. J., M. C. 81; 35 W. R. 667; 16 Cox 267; 51 J. P. 631) 248

Edwards *v.* Purnell (1899) (1 Q. B. 449; 68 L. J., Q. B. 272; 79 L. T. 737; 47 W. R. 380; 63 J. P. 249; 19 Cox 236; All. 139) . 220

Fanthorpe *v.* Lewis (1901) (All. 158) 158
Franklin *v.* Godfrey (1884) (2 M. R. 376; 10 R. 523; 63 L. J., M. C. 239; 43 W. R. 46; All. 107) 226
Froud *v.* Welch (1901) (9 M. R. 232) 153

Giles *v.* Jones (1855), Appeal from Jones *v.* Giles: see below.
Godfrey *v.* Radford (1896) (5 M. R. 9; 60 J. P. 615; 75 L. T. 224; 18 Cox 417; All. 125) 220
Great Western Railway Co. *v.* Bailie (1864) (5 B. &. S. 928; 34 L. J., M. C. 31; 11 Jur. N. S. 264; 11 L. T. 418; 13 W. R. 203; 29 J. P. 229; All. 32) 95, 155
Griffiths *v.* Place (1869) (20 L. T. 484; 33 J. P. 629; All. 44) . 174

Haddow *v.* Neilson (2 F. (Just Ca.) 19) 382
Harris *v.* Allwood (1893) (57 J. P. 7; 1 M. R. 7; All. 96) . . 158
Harris *v.* London C. C. (1895) (3 M. R. 58; 1 Q. B. 240; 64 L. J., M. C. 81; 71 L. T. 844; 18 Cox 65; 15 R. 98; All. 109) . . 157
Hayley *v.* Taylor (1900) (82 L. T. 803; 19 Cox 538; All. 154) . 160
Henton *v.* Radford (1881) (45 J. P. 224; All. 62) . . . 140, 159
Hill *v.* Browning (L. R. 5 Q. B. 153; 22 L. T. 584; 34 J. P. 774; 19 W. R. 21; 5 M. R. 93; All. 48) 332
Hill *v.* Henningan (1877) (I. R. 11 C. L. 522). 169
Holland *v.* Heath (1838) (2 Jur. 234; All. 3) 183
Hood *v.* Malcolm (1887) 25 Sc. L. R. 17; 12 M. R. 55; All. 76) . 180

PAGE

Horder *v.* Roberts (1880) (44 J. P. 256; All. 60) 153
Houghton *v.* Andrews (1895) (1905, 1 K. B. 503 *n*; All. 112) . . 225
Hughes *v.* Humphreys (1854) (3 E. & B. 954; 23 L. J., Q. B. 356; 2 W. R. 526; 1 Jur. N. S. 42; 18 J. P. 649; All. 19) . . . 150
Hutchings *v.* Reeves (1842) (9 M. & W. 747; 11 L. J., M. C. 109; 6 Jur. 439; 6 J. P. 313; All. 4) 174

Jones *v.* Giles (1854) (10 Ex. 119; 11 Ex. 393; 23 L. J., Ex. 292; 24 L. J. Ex. 259; 18 Jur. 878; 1 Jur. N. S. 982; 18 J. P. 472; All. 21, 24) 150
Jones *v.* Huxtable (1867) (L. R. 2 Q. B. 460; 8 B. & S. 433; 36 L. J., Q. B. 325; 16 L. T. 381; 15 W. R. 900; 31 J. P. 534; 5 M. R. 93; All. 35) 332

Kent C. C. *v.* Humphrey & Watts (1895) (3 M. R. 135; 1 Q. B. 903; 64 L. J., M. C. 190; 72 L. T. 563; 43 W. R. 506; 59 J. P. 520; 15 R. 414; 18 Cox 163; All. 113) 224
Kershaw *v.* Johnson (1844) (1 C. & K. 329) 174
King *v.* Spencer (1905) (91 L. T. 470; 2 L. G. R. 979; 68 J. P. 530; 20 Cox 692; 13 M. R. 14; All. 185) 158
Knowles *v.* Sinclair (1897) (1898, 1 Q. B. 170; 67 L. J., Q. B. 67; 46 W. R. 188; 77 L. T. 624; 62 J. P. 102; 18 Cox 681; All. 133) 221
Kyle *v.* Dunsdon (1908) (2 K. B. 293; 77 L. J., K. B. 547; 72 J. P. 292; 24 T. L. R. 505) 220, 405
Kyle *v.* May (1899) (7 M. R. 117; All. 141) 225

Lane *v.* Rendall (1899) (2 Q. B. 673; 69 L. J., Q. B. 8; 81 L. T. 445; 48 W. R. 153; 53 J. P. 757; 19 Cox 399 155
Lang *v.* Cameron (1894) (21 Sc. C. S. 337; All. 99) 150
Langley *v.* Bombay Tea Co. (1900) (2 Q. B. 460; 69 L. J., Q. B. 752; 83 L. T. 175; 49 W. R. 27; 19 Cox 551; All. 152) . 382, 385
London & N. W. R. Co. *v.* Richards (1862) (2 M. R. 280; 2 B. & S. 326; 8 Jur. N. S. 539; 5 L. T. 792; 26 J. P. 181; All. 30). 154
London C. C. *v.* Payne (No. 1) (1904) (1 K. B. 194; 73 L. J., K. B. 192; 89 L. T. 632; 52 W. R. 299; 68 J. P. 21; 2 L. G. R. 184; 20 T. L. R. 93; 20 Cox 580; 12 M. R. 52; All. 170) 155
——— *v.* ——— (No. 2) (1905) (1 K. B. 410; 74 L. J., K. B. 108; 92 L. T. 120; 53 W. R. 319; 69 J. P. 80; 3 L. G. R. 118; 21 T. L. R. 162; All. 192) 39, 156
——— *v.* Read (1900) (1 Q. B. 288; 69 L. J., Q. B. 39; 81 L. T. 452; 63 J. P. 775; 19 Cox 415; 8 M. R. 35; All. 149) . 333

Martin *v.* Clark (1892) (1 M. R. 226; 62 L. J., M. C. 178; All. 97) 224
Mattinson *v.* Binley (1908) (24 T. L. R. 671) 406
McIntosh *v.* Romford Local Board (1889) (61 L. T. 185; All. 80). 371
Meredith *v.* Holman (1847) (16 M. & W. 798; 16 L. J., Ex. 126; All. 7) 343, 345
Mills *v.* Allwood (1897) (All. 129) 333
Milton *v.* Troke (1869) (20 L. T. 563; 33 J. P. 821; 5 M. R. 93; All. 45) 332

PAGE

Nicholls *v.* Allwood (1904) (68 J. P. 220; All. 178) 158
North Eastern Breweries Ld. *v.* Gibson (1904) (91 L. T. 78; 68 J. P. 356; 12 M. R. 277; All. 181) 383
Painter *v.* Seers (1877) (40 J. P. 549; All. 55) 161
Paul *v.* Hargreaves (1908) (2 K. B. 289; 77 L. J., K. B. 535; 72 J. P. 231; 24 T. L. R. 501) 226, 406
Payne *v.* Thomas (1890) (54 J. P. 824; 60 L. J., M. C. 3; 63 L. T. 456; 39 W. R. 240; 17 Cox 212; All. 87) 271
Pennington *v.* Pincock (1908) (2 K. B. 244; 77 L. J., K. B. 537; 72 J. P. 199; 24 T. L. R. 509) 363

R. *v.* Aulton (1861) (3 E. & E. 568; 30 L. J., M. C. 129; 7 Jur. N. S. 238; 3 L. T. 699; 9 W. R. 278; 25 J. P. 69; All. 28) . 156
— *v.* Baxendale (1880) (44 J. P. 763; All. 62) . . . 55, 76, 156, 159
— *v.* Burton (13 Cox 71; 32 L. T. 539; 39 J. P. 532) 393
— *v.* Kennett & R. *v.* Saunders (1869) (3 M. R. 245; 5 M. R. 93; L. R. 4 Q. B. 565; 10 B. & S. 534; 20 L. T. 656; 33 J. P. 824; All. 46) 332
— *v.* Kent JJ. (1890) (3 M. R. 9; 24 Q. B. D. 181; 59 L. J., M. C. 51; 62 L. T. 114; 38 W. R. 253; 17 Cox 61; 54 J. P. 453; All. 83) 157, 180
— *v.* Kesteven JJ. (1889) (58 L. J., M. C. 157; 61 L. T. 51; 37 W. R. 670; 16 Cox 680; 53 J. P. 661; All. 77) 170
— *v.* Kingsby (1851) (16 L. T. (O.S.) 408; 15 J. P. 65; 5 M. R. 93; All. 12) 335
— *v.* Roberts (1901) (2 K. B. 117; 70 L. J., K. B. 590; 84 L. T. 530; 49 W. R. 488; 65 J. P. 359; 9 M. R. 117; All. 155) . . 216
— *v.* Skelton (1859) (1 E. & E. 816; 28 L. J., M. C. 222; 5 Jur. N. S. 1347; 7 W. R. 447; 23 J. P. 630; All. 27) 172
— *v.* Smith, *ex parte* Brunsden (1894) (58 J. P. 445; 63 L. J., M. C. 67; 70 L. T. 373; 2 M. R. 282; 5 M. R. 93; All. 104) . . 335
— *v.* Wood (1869) (5 M. R. 93; 3 M. R. 231; L. R. 4 Q. B. 559; 10 B. & S. 534; 38 L. J., M. C. 144; 20 L. T. 656; 17 W. R. 850; 33 J. P. 823; All. 41) 247, 333
— *v.* Young (8 T. L. R. 86; M. P. G. 63; All. 94) 178
Ridgway *v.* Ward (1884) (14 Q. B. D. 110; 54 L. J., M. C. 20; 25 Cox 603; 49 J. P. 150; 33 W. R. 166; 5 M. R. 93; 51 L. T. 704; All. 68) 337
Roberts *v.* Woodward (1890) (1 M. R. 155; 25 Q. B. D. 412; 59 L. J., M. C. 129; 63 L. T. 200; 38 W. R. 770; 55 J. P. 116; 17 Cox 139; All. 85) 226
Robinson *v.* Cliff (1876) (1 Ex. D. 294; 45 L. J., M. C. 109; 34 L. T. 689; 40 J. P. 292, 615; M. R. 93; All. 57) 337
Ross *v.* Johnson (1886) (3 M. R. 78; 13 H. C. J. 73; 23 Sc. L. R. 695; All. 70) 153
Rosseter *v.* Cahlmann (1853) (8 Ex. 261) 137, 150
Royal College of Surgeons *v.* Wallace Bros. Ltd. (1903) (35 Ir. L. T. R. 209) 220

PAGE

Sleater *v.* Brewsters, Ld. (1905) (2 I. R. 258; 38 Ir. L. T. 40; All. 174) 334
Smith *v.* Webb (1896) (4 M. R. 180; 60 J. P. 517; 12 T. L. R. 450; All. 120) 174
Smith *v.* Wood (1890) (24 Q. B. D. 23; 59 L. J., Q. B. 5; 61 L. T. 860; 38 W. R. 138; 54 J. P. 324; All. 81) 343, 344
Spencer *v.* Till (1897) (5 M. R. 79; All. 135) 161
Stangoe *v.* Slatter (1896) (60 J. P. 342; 5 M. R. 31; All. 116) . 220
Star Tea Co. *v.* Whitworth (1904) (91 L. T. 87; 2 L. G. R. 1000; 68 J. P. 443; 20 T. L. R. 539; 20 Cox 658; 12 M. R. 296; All. 183) 382
Starr *v.* Stringer (or Trinder) (1872) (L. R. 7 C. P. 383; 26 L. T. 735; 36 J. P. 728; All. 49) 139, 160, 171
Stone *v.* Tyler (1905) (1 K. B. 290; 74 L. J., K. B. 18; 92 L. T. 83; 69 J. P. 4; 21 T. L. R. 33; 2 L. G. R. 1363; 13 M. R. 58; All. 189) 158

The V.V. Bread Co. *v.* Stubbs (1896) (4 M. R. 182; 5 M. R. 93; 74 L. T. 704; 18 Cox 336; 60 J. P. 424; All. 121) 333
Thomas *v.* Stevenson (1853) (2 E. & B. 108; 22 L. J., Q. B. 258; 17 Jur. 797; All. 17) 174, 180
Tyler *v.* Ferris (1905) (22 T. L. R. 181; 93 L. T. 843; 1906, 1 K. B. 94; All. 201; 14 M. R. 85) 249

Washington *v.* Young (1850) (5 Ex. 403; 19 L. J., Ex. 348; 14 J. P. 591; All. 11) 156, 157
Wedderburn *v.* Davis (June 11, 1890) 172
Wedderburn *v.* Smith (1905) (92 L. T. 853; 3 L. G. R. 533; 69 J. P. 217; All. 197) 174
Welch *v.* Cutter (1905) (92 L. T. 239; 69 J. P. 149; 3 L. G. R. 282; All. 196) 333
Whittle *v.* Barnard (1881) (45 J. P. 97; All. 64) 156
Willcock *v.* Windsor (1832) (3 B. & Ad. 43; All. 3) 183
Williams *v.* Deggan (1867) (4 M. R. 30; 5 M. R. 93; 16 L. T. 492; 31 J. P. 807; All. 37) 332
Withall *v.* Francis (1878) (5 M. R. 64; 42 J. P. 612; All. 59) . 155
Wood *v.* Burgess (1890) (24 Q. B. D. 162; 59 L. J., M. C. 11; 61 L. T. 593; 38 W. R. 331; 54 J. P. 325) 382
Wray *v.* Reynolds (1858) (1 E. & E. 165; 22 J. P. 753; All. 25) . 174

TABLE OF STATUTES.

Statutes marked thus * are only alluded to.

PAGE

1796. 36 Geo. 3, c. 85, s. 1 (*Mills*) 376
1800. 39 & 40 Geo. 3, c. 81, s. 3 (*Hops*) 354
1822. 3 Geo. 4, c. cvi. (*Bread—London*) *227, 331
*1824. 5 Geo. 4, c. 74 (*Weights and Measures*) 199
——————————, ss. 12, 14 169
——————————, s. 25 183
1831. 1 & 2 Will. 4, c. lxxvi. (*Coal—London*) 340
*1834. 4 & 5 Will. 4, c. 49, s. 14 (*Weights and Measures*) . . 172
*1835. 5 & 6 Will. 4, c. 63 154
*——————————, s. 21 161
*——————————, s. 25 172
——————————, s. 26 209
——————————, s. 27 172
*——————————, s. 28 174
1836. 6 & 7 Will. 4, c. 37 (*Bread—England and Wales*) . *227, 331
*——————————, s. 6 157
1838. 1 & 2 Vict. c. 28, ss. 4–6 (*Bread—Ireland*) . . . 334, 335
——————————, s. 15 338
1838. 1 & 2 Vict. c. ci., ss. 3, 4 (*Coal—London*) 345
*——————————, s. 5 342
*1839. 2 & 3 Vict. c. 71, s. 47 (*Penalties in Police Courts*) . 178, 381
*——————————, ss. 34, 35, 71 339
1840. 3 & 4 Vict. c. 84, s. 12 (*Courts Leet*) 184
*1845. 8 & 9 Vict. c. ci. (*Justices*) 345
1847. 10 & 11 Vict. c. 14, ss. 21–30 (*Markets*) 365
1848. 11 & 12 Vict. c. 43, s. 5 (*Accessories—England and Wales*) . 393
*1849. 12 & 13 Vict. c. 45, s. 7 (*Procedure*) 157
*1849. 12 & 13 Vict. c. 97, ss. 94–97 (*Dublin*) 230
1851. 14 & 15 Vict. c. cxlvi., ss. 1, 50 (*Coal—London*) . . . 340
1859. 22 & 23 Vict. c. 56, ss. 6–8, 12 (*Markets*) . . . 209, 210
1860. 23 & 24 Vict. c. 107, s. 28 (*Int. Liq.—Ireland*) . . . 365
*1861. 24 & 25 Vict. c. 78 (*Weights and Measures—Westminster*) . 184
1862. 25 & 26 Vict. c. 76, ss. 14–16, 18 (*Markets—Ireland*) . . 390
1866. 29 & 30 Vict. c. 37 (*Hops*) 355
1872. 35 & 36 Vict. c. 94, s. 8 (*Int. Liq.—England and Ireland*) . 363

PAGE

1874. 37 & 38 Vict. c. 43, ss. 2, 3 (*Board of Trade Arbitrations*) . 244
*1875. 38 & 39 Vict. c. 17 (*Explosives*) 260
*1875. 38 & 39 Vict. c. 55, s. 167 (*Public Health*) 365
1878. 41 & 42 Vict. c. 49 (*Weights and Measures*) 143
——————, s. 17 267
*——————, s. 53 . . . . . 241, 253, 254, 259
*1878. 41 & 42 Vict. c. 52, s. 103 (*Public Health—Ireland*) . . 365
*1879. 42 & 43 Vict. c. 49, s. 4 (*Summary Jurisdiction*) . . . 334
1880. 43 & 44 Vict. c. 20, s. 28 (*Brewers*) 352
1880. 43 & 44 Vict. c. 24, s. 135 (*Spirits*) 352
1887. 50 & 51 Vict. c. 27 (*Markets, Cattle*) 370
1887. 50 & 51 Vict. c. 28 (*Merchandise Marks*) . . . *340, 379
*——————, ss. 2, 3 361
*——————, s. 14 362
*——————, s. 23 361
1887. 50 & 51 Vict. c. 58, s. 15 (*Coal Mines*) . *174, *211, 329
1888. 51 & 52 Vict. c. 41, s. 3 (*Local Govt.—England and Wales*) 376
1889. 52 & 53 Vict. c. 21 (*Weights and Measures*) 210
*——————, s. 1 162
*——————, ss. 3, 4, 35 . . . . . 154, 158
*——————, s. 9 . . . . . 241, 259
*——————, s. 11 246
*——————, s. 15 182
*——————, s. 16 177
*——————, s. 17 182
*——————, s. 19 192
*——————, s. 32 . . . . . 247, 337
*——————, s. 35 . . . . . 174, 207
1889. 52 & 53 Vict. c. 23, s. 4 (*Fisheries—Scotland*) . . 151, 389
1889. 52 & 53 Vict. c. 42, s. 29 (*Excise*) 353
1889. 52 & 53 Vict. c. 50, s. 11 (*Local Govt.—Scotland*) . *207, 377
*1889. 52 & 53 Vict. c. 63, s. 13 (*Interpretation*) . . . 184, 187
——————, s. 31 251
1891. 54 & 55 Vict. c. 70 (*Markets*) 373
——————, ss. 1, 5 373
*——————, ss. 2, 5 371
1892. 55 & 56 Vict. c. 18 (*Weights and Measures*) . . *183, 236
*1892. 55 & 56 Vict. c. 55 (*Police—Scotland*) 207, 219
——————, ss. 277, 416–427, 430, 431 . . 346–352
*——————, s. 277 365
*——————, ss. 427, 430 331
*——————, s. 431 187
1893. 56 & 57 Vict. c. 19, s. 1 (*Weights and Measures*) . . *176, 238
1893. 56 & 57 Vict. c. 61 (*Protection*) 181
1894. 57 & 58 Vict. c. 60, s. 201 (*Merchant Shipping*) . . . 378
1897. 60 & 61 Vict. c. 46 (*Metric System*) 239
——————, s. (1) 150
——————, s. 2 (1) 146

PAGE

1897. 60 & 61 Vict. c. 46, s. 2 (2) 149, 166, 211
1898. 61 & 62 Vict. c. 37, s. 4 (*Local Govt.—Ireland*) 187, 191, 195, 208
1901. 1 Edw. VII. c. 22, s. 117 (*Factories and Workshops*) . *211, 330
1903. 3 Edw. VII. c. 25, s. 52 (*Licensing—Scotland*) . . . 364
1904. 4 Edw. VII. c. 28 (*Weights and Measures*) 240
———————, s. 5 260
———————, s. 5 (4) 174
———————, s. 11 337
*———————, s. 13 . . . . . 160, 212, 216
*———————, s. 16 229

WEIGHTS AND MEASURES.

CHAPTER I.

WEIGHT, ATTRACTION OF GRAVITATION, MASS, CENTRE OF GRAVITY, PARS. 1–18—THE STRAIGHT LEVER, PARS. 19–30—THE BENT LEVER, PARS. 31, 32—CENTRE OF GRAVITY, PAR. 33—COUPLES, PARS. 34, 35—THE PRINCIPLE OF THE BALANCE, PARS. 36–39.

1. ALL material things, whether they be solids, liquids, or gases, have weight. The familiar instances of balloons, smoke, and gases rising in the air are no exception to this rule; for they rise because the air is *heavier*, and its resulting pressure forces them upwards, as the pressure of water causes wood to rise and float. It must be understood, therefore, that in using the term "weight" in these opening paragraphs, this power of the air, which tends to float bodies in it, is allowed for. In the case of heavy substances, such as water and metals, the effect of the air in lightening such bodies is very small in comparison with the weight itself, and may be neglected in most cases, certainly in the ordinary transactions of commerce.

2. In preventing bodies from falling to the ground, or in lifting them up, *force* must be used. The force used overcomes the *weight* of the bodies. Hence the "weight" of a body may be defined as that force which tends to bring it to the ground. It is found that it requires twice the amount of force to raise two gallons of water as to raise one, three times as to raise three, and so on. When dealing with different quantities of the same substance, it is found that

the *weight* is proportional to the *quantity* dealt with. From this fact, weight is taken as the measure of quantities generally. Extending this principle, the quantity of matter in a piece of one substance, say lead, is said to be equal to that in another, say iron, when the two have the same weight. On this supposition, by means of accurate weighing, the whole science of chemistry is built up, and by it new discoveries have been made. Hence it may be regarded as a fundamental proposition that THE WEIGHT OF A BODY IS PROPORTIONAL TO THE QUANTITY OF MATTER IN IT.

Illustrations:—The quantity of matter in 3 lbs. of anything is three times that in 1 lb., as for instance 3 lbs. of sugar contain three times as much as 1 lb.

A gallon of water weighs 10 lbs., therefore a quart weighs 2½ lbs.

A ton of iron is said to consist of as much iron as a ton of lead does of lead.

Nine ounces of water can be *entirely decomposed* into 8 ozs. of oxygen gas and 1 oz. of hydrogen, although, except for weight, no equality can be seen between the quantities of the original liquid and resulting gases.

3. The best-known consequence of the existence of this force called *weight*, is the tendency of bodies to fall to the ground. When they do so, their velocity (*i.e.* speed) constantly increases, but (if there be no air or other resistance to oppose the motion) the rate of increase of speed (which is called *acceleration*) is constant, and is the same for all bodies in any one place. Thus, if either a bullet or a feather is let fall freely in a vacuum, at the end of the first second its velocity is nearly 32·2 ft. per second, at the end of the next second 64·4, at the end of the third 96·6, and so on: the rate of increase of velocity, *i.e.* the acceleration, being an increase of 32·2 ft. per second in every second. It has been found, however, that the acceleration of falling bodies in one place is not the same as the acceleration in all others. The difference, however, is small: thus at London the acceleration is 32·191 ft. per second, at Dublin 32·196, at Paris 32·183, at the Equator 32·091, and at the Pole 32·255.

4. When a force acts continuously on a body it has been found that the velocity of the body is increased by the same

amount every second; and when different forces whose amounts are known act on this body, the amounts of increase in the velocities every second (*i.e.* the accelerations) are proportional to the forces producing them. This rate of increase of velocity may therefore be used to measure the force producing it. But as we find that the acceleration of a falling body in one latitude is different from the acceleration of a falling body in another latitude, we must infer that the weight of the body has altered in the same ratio as the acceleration. If a spring balance could be constructed with sufficient delicacy to show such small variations of weight, it would be found that the weights of a piece of iron, as indicated in this balance at London, Dublin, and the Equator, would be proportional to the numbers 32191, 32196, and 32091.

5. The knowledge we have of these two facts—(1) the weights of bodies compared with each other, in any and every place, are proportional to the quantities of matter in the respective bodies, and (2) on moving bodies from one place to another their respective weights all vary in the same ratio—is based on experience, and is quite independent of any theory of gravitation. But the theory of universal gravitation affords an explanation of these facts, which is given in the three following paragraphs.

6. All matter attracts all other matter according to a certain law, that is, in a certain manner. But as a body on the surface of the earth is very much nearer to the earth than it is to the sun or stars, the attraction of the latter may be neglected in comparison to that of the earth, and as the earth is very much larger than bodies on its surface, the attraction of the latter on each other may be neglected, so that the only attraction which practically need be considered, for the purposes of this book, is that which exists between each particular body and the earth. How this attraction acts, whether at a distance, or by means of the ether in the intervening space, is a problem that is yet unsolved.

7. Again, the earth being a sphere, all its attractive action with respect to all matter outside it, or at its surface,

is the same as if the whole mass of the earth were concentrated at its centre. The mutual attraction of the earth and a body on, or above its surface, produces the force which is called "weight." The weight of a body is, therefore, a force directed towards the centre of the earth. Its amount at any particular place depends on (1) the quantity of matter in the body, (2) the quantity of matter in the earth, (3) the distance of the centre of the earth from the body. Besides this, there is another force to be considered before we can complete the idea of weight. The rotation of the earth once in twenty-four hours tends to make bodies on its surface fly off, and this tendency, although very small, is greatest at those places which are farthest removed from the axis of the earth, that is, in the lower latitudes nearer the equator. We see, therefore, that (4) the weight of the same amount of matter depends on the latitude in which it is situated.

8. The weight, therefore, of a body depends not only on its distance from the centre of the earth, but on the latitude in which it is situated. As the weight is the force which produces acceleration in a falling body, and is proportional to it, the acceleration therefore varies with the latitude. By accurate and careful experiments with the oscillations of a pendulum of known length, the acceleration has been calculated for many places on the earth's surface (see par. 3).

9. The acceleration of a falling body at any place is usually denoted by the letter g. The *mass* of a body, as the quantity of matter in it is called, is usually denoted by the letter m. As the weight is proportional to both m and g, it is proportional to the product of m and g (written mg). Hence, if the weight, w, be expressed in suitable units we say it is equal to, or measured by, the product, mg. This is expressed by the formula :—$w = mg$.

10. In the foregoing paragraphs the point of view from which weight has been discussed is that of a *force*, and in all scientific investigations it is the point of view from which it

must be discussed. But in commerce what is really wanted is a comparison of the quantities of matter by means of the *forces* of their weights exerted on weighing instruments; hence we need not express the weights in terms of the ideal unit of weight involved in the above formula. In fact, in daily life we commonly speak of a "force" of so many pounds, meaning the weight of a mass of so many pounds.

Illustration:—If m be 3 lbs., then, at Dublin, where g is 32·196, w will be $3 \times 32{\cdot}196$, or 96·573 times the *absolute unit of force.* This force, 96·573, is commonly called the "weight of 3 lbs."

11. To facilitate the determination of the quantity of matter in a body, certain quantities of matter are taken as standards, and then all that people have to do is to ascertain by means of the attractive force of weight the proportion which the quantity of matter in the body bears to that in the standard. This process is termed *weighing*, and the result is termed the *relative weight*, or simply the *weight* of the body.

Illustration:—To say that a parcel of sugar "weighs three pounds" is the same thing as saying that the quantity of substance, in this case sugar, in the parcel is three times that in the standard which is known as the pound.

12. When a body is "weighed" in a pair of scales comparison is really made between the *masses* of the body and the standards used, by means of the forces or *absolute weights* of each acting on the weighing instrument. Thus, where a standard pound in one scale-pan balances a piece of lead in the other, we say that the "lead weighs a pound," that is, that the lead has the same *mass* as the standard; for since the forces, or absolute weights, are equal, w, that is, mg, is the same for both, and as both are at the same place, g is the same for both: hence m must be the same for both too. Again, when a standard pound is placed on a spring balance, the force w produces a certain effect on the spring, which is recorded by the index moving to a point which is marked "1 lb." Next the piece of lead is put on the balance, and if the index again points to the same mark we know that the force, w, produced by the lead, is equal to that produced by the standard pound. Hence these *forces*, or *absolute weights*,

being equal, the masses (m's) are equal too, since g is the same for both.

13. In this country the ultimate standard of *mass* (erroneously called "weight") for purposes of commerce is by law the IMPERIAL POUND; all other standards used in trade (set out *post*, p. 200) are obtained from it. See sect. 13 of the Weights and Measures Act, 1878 (*post*, p. 147). In delicate investigations, allowance must be made for the floating power of the air. The weight *in vacuo* is the true weight, that in air the apparent weight. The difference in amount between the weight of a body in air and *in vacuo* is the weight of that quantity of air which the body displaces. This subject is more fully discussed in pars. 174–178 below. In commerce this difference is not taken into account, as it is very small.

14. Consequently, when speaking of "weight" as producing pressure or tension, *absolute weight* is meant; but when used simply, it denotes quantity, and means *relative weight* (i.e. *mass* as measured by the *standard mass*). The change in absolute weight, owing to differences of gravity, is exceedingly small, does not affect comparison of weights in one place, and need only be taken into account in very delicate investigations, and comparisons between experiments that have been made in different places, as *London* and *Paris*. It is taken into account in such investigations as are involved in comparing the British and French standards.

Illustrations:—The expression "3 lbs. of sugar" means that *quantity* of sugar which produces on a balance the same effect as 3 standard pounds. Pressure of "20 lbs." means the *force* exerted by 20 standard pounds. The former is a measure of *mass*, the latter of a *force*. The reader will always know from the context in any passage where such terms are used which meanings are to be given them.

Since g is different in any two places, say Aberdeen and Madras, a body whose weight, indicated by a delicate spring balance, is 300 grains at the former place, where the balance was graduated, will be shown as just under 299 grains at the latter when placed in the same balance; but if the weighing be done with scales, it will weigh 300 grains in both places. This is because gravity

affects the weights used and the thing weighed in the same proportion, but it does not affect the elasticity of the spring in the former case.

15. Sometimes the terms "absolute" and "relative" weight are used to denote weight *in vacuo* and weight in air respectively, as explained in par. 13 above. They are not so used in this book. The correct term for weight in air is "apparent weight."

16. Under the earth's attraction, a rigid body always acts as if its *mass* were concentrated at a particular point within it. This point is the *centre of mass*, but is usually called the *centre of gravity*. The centre of gravity of a uniform sphere will be in its centre, that of a uniform rod at its middle. If a rod or beam be not uniform, but heavier at one end than at the other, then its centre of gravity will be nearer the heavier end. It is not necessary, for practical purposes, to find exactly the position of the centre of gravity by calculation. If a body is not rigid, but consists of two or more parts capable of moving relatively to each other, then, though the centre of gravity of each part is fixed in it, the centre of gravity of the whole is not fixed, but changes its position as the relative position of the parts changes. In theory one may consider the whole weight of several bodies to be concentrated at their centre of gravity, or if more convenient for the solution of the problem under consideration, some one or more bodies may be taken to act at their respective centres of gravity. Illustrations of this will occur in the following pages.

17. If a body be suspended so as to hang freely, it will rest with its centre of gravity vertically under the point from which it is suspended, provided that point is not itself in motion. This is because there are only two forces acting on the body—its weight acting vertically downwards through its centre of gravity, and the tension of the suspending cord or chain, which acts through the point of suspension. These two forces must, in order to neutralize each other, be exactly equal and opposite, and consequently, WHEN A BODY IS FREELY SUSPENDED AND IS AT REST, THE WEIGHT MAY BE CONSIDERED TO

ACT VERTICALLY DOWNWARDS THROUGH THE POINT OF SUSPENSION. This principle is most important, and ought never to be lost sight of.

Illustrations:—(1) In an ordinary pair of scales (see par. 42) the weight of a scale-pan and its contents, with that of the chains by which it is attached, acts vertically downwards through the point in the beam, P or Q, from which the scale-pan is suspended. And if the weight or contents of the scale-pan be placed near the edge of the pan, or attached to one of the chains, the pan with chains will swing towards the other side until it rests as above described.

(2) In the Roman steelyard, which is described below in par. 98, p. 59, the weight of the article weighed, and that of the hook to which it is attached, act vertically downwards through the pivot A, or fulcrum, on which the hook can freely swing; so too the weight of the counterpoise (p), *if hung freely*, acts vertically downwards through that point on the arm across which the edge of suspension rests. In both these cases the line through the point of suspension and the centre of gravity of the hanging body is vertical, the body swinging and finally resting so as to cause this result.

18. As the centre of gravity must lie vertically under the point of suspension, the former can be found experimentally by suspending the body from two or three points. If it be of uniform thickness and density, the intersection of two vertical lines drawn on the surface through the two points of suspension (the body hanging freely from each point in turn) will intersect at a point which shows where the centre of gravity will be. It may be in the body itself, or in space; the former is the case with a flat plate or solid scale-beam, the latter with a ring or perhaps a girder scale-beam.

THE STRAIGHT LEVER.

19. A lever consists in principle of a beam or rod (called the *arm*) which turns on a pivot or *fulcrum*. It is one of the simplest of mechanical contrivances and is in constant use. In its simplest form it corresponds to one of the figures:—Fig. (1) (a) (b) or (c). In these figures F represents the fulcrum or fixed point on which the lever turns, R the resistance to be overcome or thing to be weighed, and P the power

or weight. The arrowheads indicate the directions in which the forces act. For the purpose of investigating weighing instruments it is immaterial whether the weight be regarded

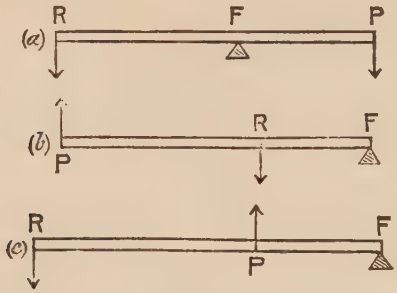

FIG. 1.

as the power, and the thing weighed the resistance, as is usually done, or *vice versâ.*

20. The tendency of a lever to turn round its fulcrum depends on two things: one, the amounts of the force and resistance; and the other, the respective distances of the force and resistance from the fulcrum.

21. For the present purpose the weight of the lever is not taken into account, and the principle of the lever may be conveniently stated as follows: WHEN THE LEVER IS AT REST under the influences of the power and resistance or, as it is usually called, *in equilibro*, THE POWER MULTIPLIED BY ITS DISTANCE FROM THE FULCRUM IS EQUAL TO THE RESISTANCE MULTIPLIED BY ITS DISTANCE FROM THE FULCRUM. In applying this test the power and resistance must be expressed in the same denomination, and so also must the distances. Thus the power and resistance must be both pounds, both ounces, or both grains as the case may be, and the distances be both measured in feet, or both in inches, or both in terms of some other standard. Then the numbers when multiplied together are treated as abstract numbers without reference to pounds, ounces, inches, or any other denomination. In Fig. 1, for instance, the force at P multiplied by the distance PF will,

when the lever is balanced, be equal to the force at R multiplied by the distance RF.

Illustrations :—(1) If in Fig. 1 (*a*) RF be 10 ins., FP be 8 ins., then 4 lbs. at R will balance 5 lbs., at P, since 4 multiplied by 10 is equal to 5 multiplied by 8.

(2) If in Fig. 1 (*b*) RF be 3 ins. and PF 10 ins., then 9 lbs., acting upwards at P, will balance 30 lbs. acting downwards at R, since 9 multiplied by 10 is equal to 3 multiplied by 30.

(3) In Fig. 1 (*c*) if PF be 4 ins., and RF 4 ft., then 4 ozs. at R will balance 3 lbs., at P, for 4 ft. are 48 ins., and 3 lbs are 48 ozs.; hence, applying the foregoing test, we have 4 multiplied by 48, equal to 48 multiplied by 4.

22. In applying the test in the preceding paragraph, it must be borne in mind that it is only true when the forces represented by P and R are parallel to each other.* In ordinary weighing instruments this is the case; since the forces are both due to gravity they act vertically downwards (see par. 7) and are therefore parallel.

23. Most weighing instruments are constructed on the principle of the lever, and consist either of a single lever or of several levers. In an ordinary pair of scales, for instance, the distances from the fulcrum of the points on the beam from which the scale-pans are suspended are equal; hence, on the foregoing principle the weights must be equal, that is, the weight of the thing weighed in one scale-pan will be that denoted by the weights in the other.

24. This principle of the lever holds good, although there be more than two forces. When in such a case the instru-

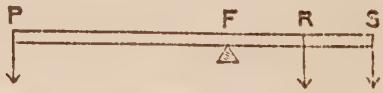

FIG. 2.

ment is *in equilibrio*, the sum of the products of those forces which tend to turn it in one direction by their respective

* It will be found convenient to use the letters P, R, etc., to denote the forces acting at the points P, R, etc.

distances from the fulcrum, must be equal to the sum of those which tend to turn it in the other. Thus in Fig. 2, when P × PF is equal to R × FR together with S × FS equilibrium will be maintained.

Illustration:—If PF be 10 ins., FR be 4, and FS be 8, then 4 lbs. at P will balance 2 at R and 4 at S, since $4 \times 10 = 40$, and $4 \times 2 + 8 \times 4 = 8 + 32 = 40$.

25. The principle of the lever may be made use of in another manner to estimate the weights of different articles. Instead of making the arms of the lever of equal length, as is done with a pair of scales, and then estimating the weight of the article by the weights used, one may use a constant weight, and estimate the weights of different articles by altering the length of one of the arms of the lever. Thus if F, Fig. 1 (*a*), be the fulcrum of the lever, P the counterpoise, and R the article weighed, then, if the lever be *in equilibrio*, R multiplied by the distance RF will be equal to P multiplied by the distance PF. For the purpose of the present illustration the weights of the arms of the lever need not to be taken into account.

Illustrations:—Suppose R weighs 10 lbs., and when the lever is *in equilibrio* PF measures 5 ins., then 10 times FR is equal to P multiplied by 5. Now, if in order to balance 8 lbs. at R, P must be moved towards F till PF is 4 ins., then the distance moved (1 in.) may be used to measure the difference in weight between 10 lbs. and 8 lbs.

From the principle of the lever, so long as FR is the same length and P a constant weight, the distance PF when the lever is *in equilibrio* must be proportional to the weight at R, and may therefore be used to measure it. In the foregoing illustration, if PF were graduated each half inch would represent one pound, a quarter inch half a pound, and so on.

Weighing machines constructed on this principle are known as *steelyards*, and are more fully described on p. 59.

26. As the power of a force to turn a body to which it is applied round any point, is proportional to the magnitude of the force, and also to its distance from that point, it may be measured by the number representing the product of the number which represents the force with that which represents

its distance from the point. This product is known as the *moment* of the force around the point. The distance of the point from the force is the length of the perpendicular from the point on the line of action of the force.

Illustrations :—Referring to the first illustration in par. 21 on p. 10, the "moment" of the 4 lbs. at R. (Fig. 1, *a*) round F is 4 multiplied by 10, that is 40. So also is the moment of 5 lbs. at P round F, since 5 multiplied by 8 is also 40. So also with the second illustration in the same place, the moments of R and P round F are each equal to 90.

If the distances be measured in *inches* and the weight be expressed in *pounds*, then the moment may be expressed as so many "*inch-pounds*;" 5 lbs. acting at a distance of 8 ins. would be "40 inch-pounds."

27. In practice, although spoken of as the moment of a force around a point, it is really the moment of the force round a line passing through the point.

Illustrations :—Thus, in Figs. 9 and 12, pp. 17, 23, when one speaks of the moment of a weight W or P, in one scale of a balance, round the fulcrum or pivot of the beam F, what is really meant is the moment of the weight round the line which passes through those points on each side of the beam where the knife-edges rest on their respective bearings.

In Fig. 2 in par. 24 the tendency of the weight at P is to turn the lever round F so that the end at which P acts moves in a vertical plane; hence, the arm FP moves *as if* round a horizontal axis at F, that is, one perpendicular to the plane of the paper, which represents the vertical plane in which the weight of P acts.

28. Adopting the term "moment" as above described, the principle of the lever may be thus stated. A lever is *in equilibrio* when the moment of the resistance (or thing weighed) with respect to the fulcrum is equal to that of the power or weight used.

29. The illustrations given in the preceding paragraphs have been with respect to levers in a horizontal position. The same principles govern levers in positions inclined at an angle to the horizonal. For instance, in Fig. 3 let P, Q, and R be three weights which act at the points *x*, *y*, *and z*, *which are all in a straight line* with *f* the fulcrum; through *f* draw the

horizontal line $x'fy'z'$ meeting vertical lines through x, y, and z in the points x', y', and z' respectively. The lever is *in equilibrio*

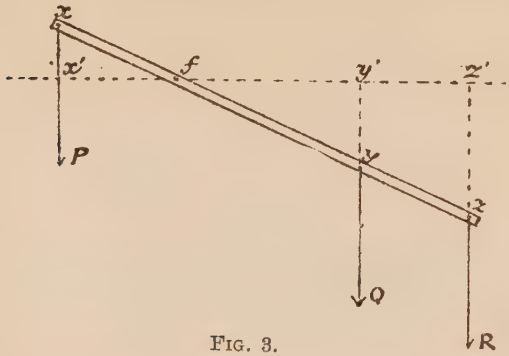

FIG. 3.

when the moments tending to turn it one way are equal to those tending to turn it the other, that is, when

$$P \times fx' = Q \times fy' + R \times fz'$$

But since the triangles in the figure are all similar to each other, the distances fx', fy', and fz' are proportional to fx, fy, and fz respectively; hence, *in equilibrio*

$$P \times fx = Q \times fy + R \times fz$$

Therefore, *when all the points of application of the forces are in the same right line as the fulcrum, the position of the lever does not affect the condition for equilibrium.*

30. In the preceding paragraphs the weight of the lever was not taken into account, but the result will be the same provided the centre of gravity of the lever itself (through which its weight may be supposed to act) is in the same straight line with the fulcrum and points of application of the other weights. The proposition stated in the preceding paragraph is also true when the fulcrum is at one end and some of the forces act upwards. This will be seen in Figs. 4 and 5. Let P be a pull vertically upwards, Q and R two weights or pressures acting vertically downwards, at x, y, and z respectively, W the weight of the lever itself acting

at g the centre of gravity, f, z, g, y, and x being all in the same straight line. The moment tending to turn the lever

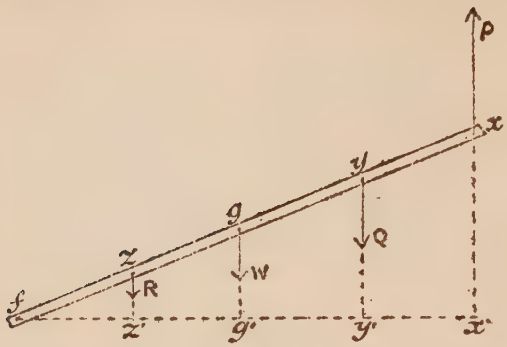

FIG. 4.

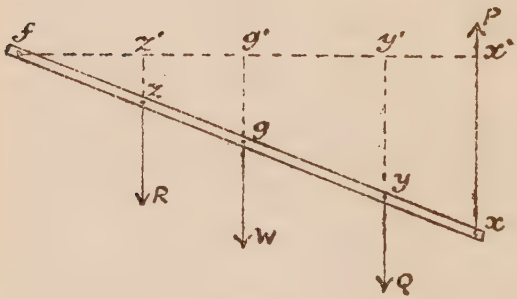

FIG. 5.

upwards is $P \times fx'$ and it is equal to the sum of the moments $Q \times fy'$, $W \times fg'$, and $R \times fz'$ downwards; hence—

$$P \times fx' = Q \times fy' + W \times fg' + R \times fz'$$

and since in each figure the triangles are similar—

$$P \times fx = Q \times fy + W \times fg + R \times fz$$

which is the same result as if the lever were perfectly horizontal.

THE BENT LEVER.

31. So long as the moments are equal the lever will balance, although the points at which the forces are applied are not in the same straight line with the fulcrum. Thus, in

FIG. 6.

Fig. 6 the lever will balance so long as the moment of P round the fulcrum, that is P multiplied by F*p*, is equal to the moment of R round F, or R multiplied by F*r*, the imaginary line *r*F*p* being at right angles to both forces.

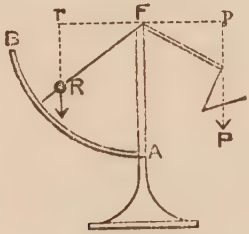

FIG. 7.

Illustrations :—Instruments for weighing letters and such articles are made as in Fig. 7 upon this principle. When at rest, the moment of P (the weight of the article) round F is equal to that of the counterpoise and arm FR. A scale, AB, indicates the weight corresponding to each position of R.

In another form of this instrument the scale AB is attached to and moves with the pointer FR. There is an index fixed at A by which the graduation opposite it can be read. In such an instrument, the vertical line *r*R passes through the centre of gravity of the scale and pointer as it does through R in the above figure.

32. "*Force*" may be defined as "that which tends to produce or destroy motion." It follows from this definition that force is measured by the amount of motion it can produce or destroy if free to act on a body. Thus it is that the force of weight (or "absolute weight") is measured by the motion it

produces in the mass when let fall freely, as has been mentioned in pars. 3 and 4 (*ante*, p. 2). But when a body does not fall its weight does not produce motion, hence it must be neutralized in its action by another force equal in magnitude and opposite in direction. If the body be wholly suspended, this opposing force is the *tension* of the suspending cord; if it be on the ground, or some support, the force which neutralizes the weight is the upward *reaction* of the support. Now, in the case of a lever balanced on a fulcrum, the force opposing the total weight of lever and weights on it, is the *reaction of the fulcrum*, which therefore *must act vertically upwards and be equal to the total weight.* Hence, as this single force, the *reaction*, balances the total weight, it follows that the downward forces of the weights of lever itself and loads, are equivalent to a single force equal to the total weight acting in a direction which passes *vertically downwards through the fulcrum.* Therefore, when the lever is in equilibrium the FULCRUM is the point through which the TOTAL RESULTANT of all the weights acts.

33. If a body be rigid, each particle of it is subject to a force vertically downwards equal to the weight of that particle. The whole weight therefore consists of the sum of all these parallel forces, and is a single force acting vertically downwards. Just as the fulcrum or point on which a lever balances is a point through which passes the resultant weight, so in a body the total weight acts vertically downwards along a single line, the position of which depends on the relative positions and weights of the particles of the body. This is true in whatever position the body is held, as the sizes and relative positions of its particles remain unaltered. Therefore there is a single point in the body through which the weight may always be supposed to act. That point is the CENTRE OF GRAVITY of the body. In the same way several bodies may be considered to act at a point which is the centre of gravity of the whole.

34. When there are two equal forces acting on a body in parallel but opposite directions, as in Fig. 8, where *p*P denotes

a force P acting at p, and another equal force acts at q, the result is that the body will tend to rotate in the direction indicated by the arrows round any point. This is called a

FIG. 8.

couple, and its moment is P multiplied by pq (*ante*, par. 26). The effect of a couple will be neutralized by any other couple tending to turn the body in an opposite direction, provided this second couple has the same moment as the first one.

Illustrations:—Suppose AB in Fig. 9 to be a beam, with scale-pans *rigidly* attached, balanced on a fulcrum at F and AF equal to FB.

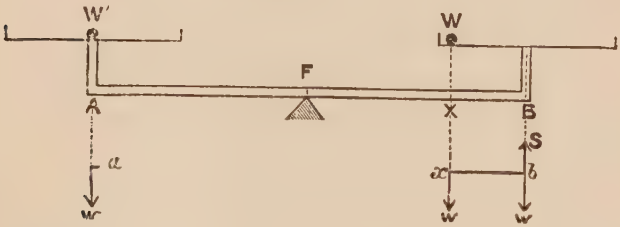

FIG. 9.

Now a weight W′ placed over A in the centre of one pan will not be balanced by an equal weight W placed at the edge of the other. Since weights act vertically downwards, the weights in the left and right-hand pans may be considered as acting at A and X respectively. But the moment of W′ round F (par. 26 above) is greater than that of W round F. Hence A will descend and B rise. The difference of these moments is W multiplied by the difference between AF and FX, that is XB.

It may be looked at in another way. For convenience of reasoning, let aw and xw represent the weights W′ and W acting vertically downwards through A and X respectively. Let two forces equal to W, and opposite in direction, and therefore having no effect, be introduced at B (represented by bw and bs below B in figure); now aw may be considered to balance bw, and there will be left the "couple" formed by xw and bs, whose moment is xw multiplied by xb, or, what is the same thing, W multiplied by BX.

35. From this illustration it is seen that when rigid pans are attached to a properly-balanced beam, the weight is only correct when the weight and thing weighed are so placed that they are at corresponding points; if the instrument be balanced otherwise, then the weight indicated by such an instrument is inaccurate.

Illustrations :—In Fig. 9 if AF and FB be each 8 ins. and the pans be 3 ins. wide, then FX will be $6\frac{1}{2}$ ins., and therefore a pound weight at W would balance 13 ozs. at W′; thus a customer would be defrauded of 3 ozs. in the pound.

In order to have accurate instruments with pans for convenient use, various devices have been resorted to. These are described further on.

THE PRINCIPLE OF THE BALANCE.

36. Before describing the different classes of weighing instruments, it is advisable to explain the important points to be attended to in constructing a good balance; a *balance* in this sense is a weighing instrument with equal arms to the lever, such as an ordinary pair of scales. The main part of a balance is a beam, balanced and turning on a pivot or fulcrum at its centre.

37. The force of *friction* is one which, whether a body is sliding, or at rest, is opposed to the motion or tendency to motion which the body has in consequence of other forces acting upon it. It is only called into play by the action of other forces. The *amount* of this force, when motion is about to ensue, depends on the nature of the surfaces in contact, and also is *proportional* to the pressure of those surfaces against each other. In a weighing instrument the heavier the weights are the more friction is developed at the bearings. The force of friction is in such a *direction* as would tend to destroy the motion which is or tends to be set up. But as friction prevents slipping, it enables one body to roll on or against another. A train could not move if there were no friction between the driving-wheels and the rails. But there is a certain resistance experienced to rolling, which is usually called "rollin friction·" it is much less in amount than

ordinary force of friction. When a balance is oscillating, the chief force which brings it to rest, is the "rolling friction" of the knife-edges rolling in their bearings.*

38. Equilibrium is of three kinds. Forces are in *stable* equilibrium when the body on which they act *tends to return* to its position of equilibrium after being slightly displaced from it, *e.g.* the case of a pendulum. Equilibrium is *unstable* when the body *tends to fall further away* on being slightly displaced, *e.g.* an egg when balanced on its end. In *neutral* equilibrium there is no tendency for the body to move after a slight displacement, *e.g.* a uniform circular roller or a uniform sphere on a level plane.

Illustrations:—Suppose, for the purpose of illustration, that Fig. 10 (the supports are omitted for clearness) is the beam of a balance,

FIG. 10.

PF and FQ being equal, and *a*, *b*, *c* sets of three holes at the ends and middle of the beam. Let *b* at F be the *centre of gravity* (see pars. 16 and 17) of the beam. The beam may be considered to have all its weight at the point F*b*.

If the beam be balanced at F*b* by putting a pin through the hole there will be no tendency for it to occupy any particular position, as its own weight will have no power to turn it; that is, it has no moment round the point F*b* (see par. 26). This is a case of *neutral* equilibrium.

But if the beam be balanced at the point F*c* by passing a pin through that hole, it is obvious that, as the weight acts at the point F*b*, the beam when slightly displaced will turn right over until *b* comes directly under *c*. This is an example of *unstable* equilibrium.

Again, if the beam be balanced as before at the point F*a* then the weight acting at F*b* will tend to keep it in its place, and if the beam be slightly displaced it will swing back to its former

* A fuller statement of the laws of friction will be found in any text-book of elementary mechanics. The problem of the time of oscillation of a balance is a complicated one: it will be found fully treated in "The Theory of the Balance," by J. Walker, M.A. (Clarendon Press). See also Roy. Soc. Proc., vol. 63, p. 454 (1898).

position, and after a few vibrations will come to rest. This is *stable* equilibrium.

39. Balances constructed so as to rest in *neutral* equilibrium would be useless, as there would be no means of showing whether the position was a mere chance one, or due to an excess of weight more or less. Balances and lever weighing machines of all kinds fall into one or two classes, *accelerating* and *vibrating* instruments, according as the position of equilibrium is *unstable* or *stable.* As a position of unstable equilibrium cannot be maintained, accelerating instruments (such as the ordinary counter machine with fixed pans) are constructed to rest by means of "stops," or similar devices, in such a position that a very slight excess of weight will destroy equilibrium, and then the beam will continue to move until brought up by some stop on the other side. Vibrating instruments (such as a pair of scales) have a position of stable equilibrium to which they tend to return if disturbed. If a slight excess of weight be put in either pan they vibrate, and finally come to rest in a position more or less distant from the position they take when the load in each pan is equal, according to the amount of the excess.

CHAPTER II.

PAIR OF SCALES, PARS. 40, 41—SCALE BEAMS, PARS. 42–54—THE THEORY OF THE BALANCE, PARS. 55–59—THE FULCRUM AND BEARINGS, PARS. 60–62—ACCURATE WEIGHING, PARS. 63–65—TESTING SCALES, PARS. 66–76—THE ROBERVAL BALANCE, PARS. 77–86—INVERTED BALANCES, PARS. 87–89—TESTING ACCELERATING BALANCES, PARS. 90–93—BOX, FRENCH, AND NATIONAL MACHINES, PARS. 94–96—APPLICATION OF ITS PRINCIPLE, PAR. 97—STEELYARDS, PARS. 98–103—TESTING STEELYARDS, PARS. 104, 105—PLATFORM MACHINES AND WEIGH-BRIDGES, PARS. 106–134—VARIOUS WEIGHING MACHINES, PARS. 135–141.

40. WEIGHING instruments are of various kinds. In the following pages the principles of construction of the best-known kinds will be explained. The details and forms of the different sorts of instruments are as various as the uses to which they are put, but the principles on which they are constructed are comparatively few. The best-known kinds in shops are levers with equal arms, such as scales and counter machines in which the weights used are equal to the weights of the merchandise. Heavy and bulky goods are weighed by means of levers with unequal arms, such as steelyards, and compound lever instruments, such as platform machines and weigh-bridges, in which the weight of goods is denoted by the position of a poise on a lever, and by the weights of poises bearing a fixed ratio to the weight of the goods. Spring balances are also much used by which (see *ante*, par. 12) weight is balanced by the force exerted by an elastic spring. In large machines for certain purposes, when automatic action is desirable, liquids are made use of to operate by floating a counterpoise; or to bear and transmit to a gauge the *pressure* produced by a load of goods.

41. By far the most accurate instrument is the "pair of scales" with equal arms. It will be necessary, therefore, to examine thoroughly the action of an ordinary scale-beam, which is the foundation of all machines in which goods are balanced against an equal weight of standard weights. The action of the scale-beam is, in many respects, the same in *principle* as that of unequal armed levers, hence it is important to understand thoroughly the principles on which a scale-beam is constructed.

42. Scale-beams are made of different shapes. There are "knife-edges" at the ends at p and q from which the scale-pans are freely suspended, so that the weight of each pan with its contents acts vertically downwards, through the knife-edges at p and q (see par. 17). In the centre is a

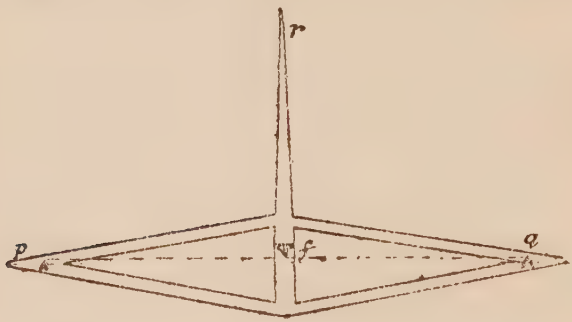

FIG. 11.

knife-edge f which rests on a bearing. The arms of the lever are the distances, pf and fq, which must be equal. The beam can turn or oscillate on the fulcrum which is the point f where the knife-edge rests on its bearing. An index fr is attached to the beam and is at right angles to pq, the line joining the extreme knife-edges. When the beam hangs in a "gallows," the whole weight of the beam and pans and weights acts vertically downwards, through the point f: this force is equal and opposite to the tension of the gallows which acts vertically upwards. But the total weight of the beam, etc., *and gallows* acts vertically downwards through the point from which the

gallows is suspended; hence, the gallows hangs vertically and the beam is balanced, when the index *fr* coincides in direction with the gallows. In balances in which the knife-edge at *f* rests on a fixed bearing, the index is usually a pointer extending perpendicularly to *pq*, but downwards instead of upwards. For this index to indicate accurately, the instrument must be placed on a level plane; otherwise, when balanced, the pointer of the index would not rest at the zero on the scale. In accelerating instruments, such as ordinary counter machines, the index is unnecessary, as a smaller or larger difference in weight produces the same effect, that is, provided the difference is large enough to move the instrument at all. In such machines the bearings under the pans rest upon the knife-edges, *p* and *q*, instead of being suspended from them.

43. We have seen (par. 16) that the centre of gravity of a rigid body (as the beam, fixed pans and weights in Fig. 9) is a fixed point, but when we come to consider a balance, such as that in Fig. 12, with suspended pans, the parts of

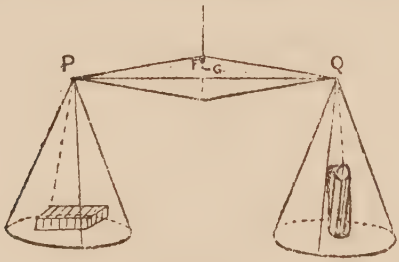

FIG. 12.

which can move relatively to each other, the position of the centre of gravity of the whole (*i.e.* the beam and pans) changes as the beam swings. But if we remember that the weight of a freely suspended body always acts vertically downward through the point of suspension (par. 17), we see that in all positions of the beam the weight of one pan and its contents acts vertically downward through P and the other through Q. Hence, in considering such a case we can treat it

as if the one scale-pan and its contents were concentrated into a small particle (equal in weight to pan and contents) and rigidly attached at P; the other pan with its contents being similarly concentrated at Q. Thus we avoid having to consider the true centre of gravity of the pans and contents, the position of which is continually changing. It is the conditions of equilibrium of the beam that is the important matter.

44. In considering the equilibrium of the scale-beam, these *equal* weights (say P), acting vertically downwards through the end knife-edges, may be considered as an equivalent single weight (say 2P) acting at the *middle point of the line joining the knife-edges.* To prevent confusion this point is referred to in the following pages as the "*centre of load.*" If the weights be unequal the centre of load will not be midway, but nearer the knife-edge supporting the heavier weight. The "CENTRE OF LOAD" may be defined as *that point on the beam through which acts the resultant of the weights of the things weighed, and weights or poises used, including the scale-pans.* The "centre of load" has been sometimes confused with the centre of gravity, so as to give rise to the curious and erroneous notion that, in the case of counter machines, the shape and height of the weight used affect the action of the instrument! It is obvious that the centre of load must be in the plane through the knife-edges, on which the scale-pans are hung.

45. In a vibrating balance the addition of a slight excess weight to the contents of one of the pans will cause the beam to oscillate, and finally come to rest in such a position that the pointer will be a little to one side of the position it would occupy if both pans were empty, or if they contained exactly equal weights. The pan in which is the excess weight will be the lower. The force tending to keep the beam displaced from its level position is the excess weight, which acts vertically downwards through the knife-edge on which the depressed scale is hung. This force produces a moment which is proportional to the excess weight and to the distance

between the vertical line through the knife-edge and the fulcrum. The longer the beam is, the more delicate or *sensitive* the balance will be, as a given excess weight will exert a greater moment and move the index further than if the beam were shorter. On the same balance this moment will be proportional to the amount of the excess weight, and if the scale be a straight one marked with equal divisions, the length indicated on it by the pointer will measure the amount of the excess, *other things being equal.* For instance, if in any weighing (say of 1 lb.) a difference (say of five grains) is shown by an indication of one division on the scale, then the addition of ten grains more will cause the pointer to move to the third division. But whether the indication for five grains be one division or two depends on the moments tending to move the beam back to its level position. These will now be considered.

46. If the balance be so constructed that the extreme knife-edges are in the same plane as the fulcrum *equal* loads on the pans will act as if at the fulcrum. All the load, therefore, except the excess weight, will affect the beam as if it were at the fulcrum. Therefore the equal loads will not tend to turn the beam, and the only force left to counteract the excess weight will be the weight of the beam itself. This will act vertically downwards through the centre of gravity of the beam, and, when the beam is level, through the fulcrum also. As the balance is a vibrating one the centre of gravity of the beam is below the fulcrum. But as soon as one end of the beam is depressed by the excess weight, the vertical line of action of the weight of the beam will pass on the other side, but very near the fulcrum.* A moment will thereby be brought into play and will equilibrate that of the excess weight described in par. 45. This moment does not depend on the equal loads in the pans, hence the indications on the scale for given excess weights will be independent of the load —if five grains excess move the pointer one division when 1 lb. is being weighed, it will, if friction be practically absent, also move it one division when 2 or 3 lbs. are weighed.

* This will be seen on the line *gg'* in Fig. 13 (*post*, p. 29), in which the distances are exaggerated for the sake of clearness.

47. In the form of balance just described the lower the centre of gravity is the further from the fulcrum the vertical line of action of the weight passes, and the greater the moment will be for any given angle of deviation. The moment tending to restore the beam depends on three elements: (1) the acting force, that is, the weight of the beam, (2) the distance of its centre of gravity below the fulcrum, and (3) the angle of deviation. If the balance is required to be a *sensitive* one, it must give a large angle of deviation for any given excess weight, and therefore the other elements (1) and (2) must be small—that is, the beam must be constructed so as to be as light as possible and to have its centre of gravity very near but below the fulcrum.

48. In the case of a balance which has the centre of gravity of the beam at the fulcrum the weight of the beam itself has no effect in turning the beam, or resisting the moment caused by the excess weight. Such a balance would be too unstable for use unless the extreme knife-edges are below the fulcrum. When so constructed *equal* weights of pans and contents may be considered to act at the point midway between the knife-edges, this point, when the beam is level, being vertically below the fulcrum. In this case the moment equilibrating that of the excess weight is that of the load (excluding the excess weight) round the fulcrum. The action is similar to that described in par. 46 above, if the load be substituted for the weight of the beam, and the point midway between the knife-edges for the centre of gravity of the beam. But the result in reading the scale will be different, for the indications will depend on the load as well as on the excess weight; for instance, if five grains move the pointer to the second division when 1 lb. is being weighed, the same excess will only move it to the first division when 2 lbs. are weighed, and so on. In such an instrument the *sensitiveness will decrease as the load increases.* To be as sensitive as possible, the line joining the knife-edges must pass as close under the fulcrum as possible.

49. When a balance is so constructed that the centre of gravity of the beam is at or above the fulcrum, and the line

through the extreme knife-edges passes through or above the fulcrum, the instrument is an accelerating one. Its position of equilibrium is unstable, so it is kept at rest by a prop or stop in a position quite close to that of equilibrium. Its sensitiveness depends therefore on the smallness of the angle between its propped position and true equilibrium, and on the weight required to move the beam through this angle so as to bring it over the neutral position and down on the other side as far as the stop will permit.

50. The best vibrating balances are those in which the extreme knife-edges are in a line with the fulcrum, and the centre of gravity of the beam below the fulcrum, as described in par. 45. In practice, the knife-edges may not be in the same plane as the fulcrum, nor the centre of gravity of the beam at the fulcrum, and therefore the sensitiveness may depend in part on the amount of the load, as described in par. 48. This will happen in an instrument in which the centre of gravity of the beam is below the fulcrum and knife-edges in the same plane with it, if the load be so great that the beam bends and brings the extreme knife-edges below the fulcrum. The sensitiveness will depend therefore only partly on the load.

51. If a balance be constructed in which the end knife-edges are slightly above the fulcrum, the following peculiarities will be observed. On placing a very small weight in one pan it will be depressed, and the beam rest with a slight deflection. The forces or weights then acting on the beam are three: (1) that of the small weight vertically downwards through the knife-edge of the pan in which it rests; (2) that of the total weight of the pans, acting through the point midway between the knife-edges; and (3) that of the beam itself acting through its centre of gravity, which is slightly below the fulcrum. The two former tend to turn the beam in one direction, and the third in the other; it will rest with the weighted pan slightly depressed, the moment caused by the weight of the beam being equal to the sum of the moments of the other two forces. Now, if an equal load

be placed in each pan the second of these forces, *i.e.* weight of pans and contents, will be increased, and the beam will be further deflected before coming to rest. The instrument will be more sensitive, but still a vibrating one. If the equal loads be further increased the beam will be unable to redress the balance, and the instrument will be practically an accelerating one.

52. In the illustration in the preceding paragraph no account was taken of the possible bending of the beam. If the equal loads be further increased so that the beam bends, the extreme knife-edges may be brought below the fulcrum, and a state of things produced as described in par. 48. This form of instrument therefore may present the following features according to the amount of the load: (1) moderate sensitiveness; (2) increased sensitiveness (both as a vibrating balance); (3) total instability; (4) accelerating action; and (5) vibrating action again with sensitiveness depending on load. It is therefore of the utmost importance that balances be tested for strength of beam, and as to the relative position of the knife-edges, these can be tested by testing the sensitiveness with gradually increased loads, preferably with equal differences. In some cases beams are so constructed as to allow for the bending of the beam, so that when the pans are empty the sensitiveness will be the same as when they are fully loaded, but not to same degree at intermediate positions.

53. If a balance is to have a high degree of sensitiveness, it must comply with the following conditions: The beam should be as long and as light as possible, its centre of gravity should be just below the fulcrum, and the end knife-edges should be in the same plane as the fulcrum. A sensitive balance is capable of indicating very small differences in weight, in balances of precision one millionth of the load. But it is the small difference in weight that is the force which moves the beam on its fulcrum, raises one loaded pan and depresses the other. Hence the smaller the weight and the more sensitive the balance the slower the operation of weighing will be.

54. The tendency of a balance to come to the position of rest after being disturbed from it is termed the "*stability*" of the balance. It depends on the restoring moments described in pars. 46 and 48 above. To obtain great stability these must be as large as possible, hence stability and sensitiveness are converse to each other. A STABLE balance comes to rest more quickly than a sensitive one. It depends on the purpose for which a balance is designed which of these qualities is sacrificed to the other. Balances of precision have been constructed to indicate an excess weight of one millionth of the load.

THE THEORY OF THE BALANCE.

55.* Let p and q in Fig. 13 be the knife-edges from which the scale-pans are suspended, or on which they rest. The fulcrum is at f; o is the centre of load, midway between

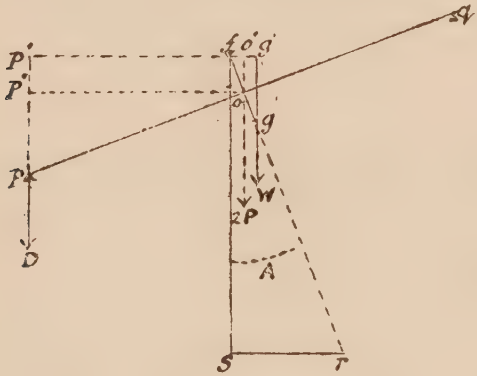

FIG. 13.

p and q; g the centre of gravity of the beam; sr the scale at right angles to fs, and horizontal; fr the direction of the index or pointer when the beam is inclined at an angle A. The forces are: D, the difference in the weights in the pans, P + D being in the left pan, and P in the right pan (the

* This paragraph, and those numbered 56–59, contain a further exposition of pars. 45–54 and are not necessary for practical work.

weight of each pan being included in P); and W the weight of the beam. The equal weights P may be considered as 2P acting at o. W acts through g, and D through p; all these act vertically downwards. These balance round f, hence the moments of 2P and W round f are equal to that of D; hence—

$$(1)\ \mathrm{D} \times fp' = 2\mathrm{P} \times fo' + \mathrm{W} \times fg'$$

Since the deflection of the beam is very small, fo' is very small compared with fp', hence for fp' we may substitute op''.* Since the triangles foo', fgg', rfs, and pop'' are all similar, we have—

$$fo' : fo :: fg' : fg :: sr : fr$$

$$\text{hence } fo' = fo \times \frac{sr}{fr} \text{ and } fg' = fg \times \frac{sr}{fr}$$

$$\text{and also } op'' : op :: fs : fr$$

$$\text{hence } op'' = op \times \frac{fs}{fr}$$

Putting these values for fo', fg', and fp' (or op'') in eq. 1, we have—

$$(2)\ \mathrm{D} \times op \times \frac{fs}{fr} = (2\mathrm{P} \times fo + \mathrm{W} \times fg) \times \frac{sr}{fr}$$

The common denominator fr cancels out, and by dividing both sides of the equation by fs we have—

$$(3)\ \mathrm{D} \times op = (2\mathrm{P} \times fo + \mathrm{W} \times fg) \times \frac{sr}{fs}$$

Now the length sr will vary with the distance fs, but the ratio $\frac{sr}{fs}$ does not so vary; this ratio is called the "tangent of the angle A," and is written "tan A." † The equation may then be written—

$$(4)\ \mathrm{D} \times op = (2\mathrm{P} \times fo + \mathrm{W} \times fg) \times \tan \mathrm{A}$$

From the form of the above equations we see that in *the same*

* The error thus introduced is about 1 in 10,000, and does not at all affect the conclusions of principle drawn from the final equation.

† Tables showing tangents of angles for any number of degrees will be found in any collection of mathematical tables.

weighing instrument D is proportional to tan A or to *sr*, the length intercepted on the scale. Hence, if *equal divisions* on the scale are to represent *equal differences of weight*, the scale must be a straight one.

56. In cases such as chemical investigation, in which the things weighed are comparatively light so that there is no apparent bending of the beam, it is found of great advantage to construct the beam with the fulcrum *f* on the line midway between the knife-edges, so that the distance *fo* is nothing. Then eq. 4 in the preceding paragraph becomes—

$$(1)\ \mathrm{D} \times op = \mathrm{W} \times fg \times \tan \mathrm{A}$$

from which it appears that the same angle of deviation A indicates the same difference of weight D, whatever the load may be. It will also be seen (next paragraph) that the sensitiveness is also independent of the load. As large weights produce a bending of the beam, thereby altering the distance *fo*, these advantages can only be approximately secured by constructing the beam so that *f* and *o* coincide when the beam is loaded to half its full amount.

57. There is a certain relation between the indications on the scale and the difference D, of the weights which is known as the "*sensitiveness*" or "*sensibility*" of the balance. It is usually expressed in the form $\frac{\tan \mathrm{A}}{\mathrm{D}}$. This is not a ratio, for tan A is a mere numerical ratio itself, and D is a weight expressed in grains (or milligrams in the Metric system) as is found most convenient. The "sensitiveness" is the scale indication *per grain* or *per milligram*. From eq. 4, par. 55—

$$(1)\ \frac{\tan \mathrm{A}}{\mathrm{D}} = \frac{op}{2\mathrm{P} \times fo + \mathrm{W} \times fg}$$

The sensitiveness, therefore, is proportional to the length of the beam, and inversely proportional to the denominator of the above expression. So long as *o* and *g* are below the fulcrum, the greater either P, W, *fo*, and *fg* are, the less the

sensitiveness. If either o or g be above the fulcrum, the sensitiveness may become very great or instability ensue, since one of the products $2P \times fo$, or $W \times fg$ will be negative. In the particular case in which o coincides with the fulcrum (*ante*, par. 56), the sensitiveness is independent of the load, as it is equal to $\frac{op}{W \times fg}$.

58. The tendency of the beam to return to its position of rest, after being slightly displaced from it, is termed the "*stability*" of the balance, and is equal to the total moments round the fulcrum tending to make the beam return. We can easily see its amount from eq. 4 of par. 55. For if, when the beam is loaded with equal weights, we displace it from its horizontal position through the angle A, it will be in equilibrium if we put the extra weight D in one pan, provided

$$D \times op = (2P \times fo + W \times fg) \times \tan A$$

Hence, if we do not put in the extra weight, the beam will tend to return with a moment, which can be exactly counteracted by that of D, and which is therefore equal and opposite to it. So for any given angle, (A), of displacement this moment, which $= D \times fp'$ and nearly $= D \times op''$, is proportional to $D \times op$; and hence (eq. 4, par. 55) to $2P \times fo + W \times fg$. (1)

We also see that the more stable the beam, in a given case, the larger will D be for a given displacement, that is, the less sensitive will the balance be. Practically the use to which the balance is to be put decides how far stability and sensitiveness must be sacrificed to each other. An increase in the length of the beam would, without affecting the stability, increase the sensitiveness if other things were equal; but practically this increase in length involves still greater increase in the weight of the beam W. This tends to lessen the sensitiveness again, and so, to see if there is any advantage gained, we must consider not one, but all the factors on the right-hand side of the equation in the last paragraph. In practice (as explained, *post*, par. 62) the fulcrum is made to

shift so as to increase the stability as the inclination of the beam increases.

59. In eq. 4 of the balance given in par. 55, and in par. 56, it is assumed that both the centre of gravity, g, of the beam, and the centre of load, o, are below the fulcrum. If either of these points be above the fulcrum, then the corresponding distance, fg or fo, will be negative. The equation will then be—

$$(1)\ \mathrm{D} \times op = (2\mathrm{P} \times fo - \mathrm{W} \times fg) \times \tan \mathrm{A}$$

or—

$$(2)\ \mathrm{D} \times op = (\mathrm{W} \times fg - 2\mathrm{P} \times fo) \times \tan \mathrm{A}$$

If in either of these cases the negative term be the greater, D will be *negative*, and will represent the *upward* reaction of the stop against the beam, the instrument being in unstable equilibrium and therefore "accelerating." The equation represents the relation of the force necessary to move the beam to the horizontal position through the angle at which it is propped up. If both g and o are above f, the balance must be accelerating. The centre of load, o, may be placed so close above f that equilibrium is stable (see equation 2). The increase of the load 2P tends to produce instability, and at the same time the bending of the beam shortens fo; the one may compensate for the other, and so secure a high degree of sensitiveness. When the loads and distances are such that the right-hand side of the above equations are zero, then the equilibrium is neutral, and the beam is too sensitive for use.

THE FULCRUM AND BEARINGS.

60.* The shapes of the fulcrum and bearings materially affect the action of the balance. The knife-edges are usually made at an angle of 120° (as in Fig. 14), the outer faces being inclined at a sharper angle, usually 60°. The nature of the shape of the edge itself is of importance. This, for the

* This paragraph and the two following may be omitted on first reading.

present purpose, may be considered circular. The exact nature of the motion of a knife-edge on its bearing has not been fully determined, but according to Prof. Airy,* the pressure probably causes the knife-edge and bearing to yield

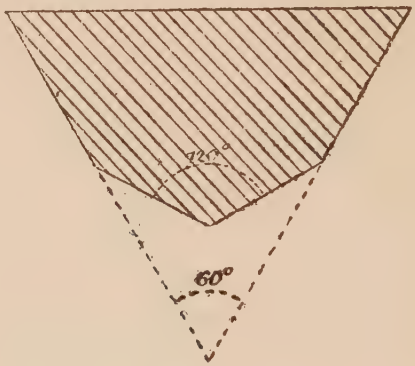

FIG. 14.

to each other to a very slight extent, so that, as it were, a groove is formed in the bearing in which the knife-edge revolves (see Fig. 15). Consequently the sharper the knife-

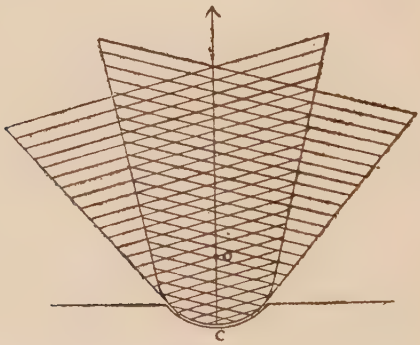

FIG. 15.

edge the smaller will be the radius of this groove and the less the friction. As the knife-edge becomes blunter by wear, the friction increases, and generally the instrument

* "Proc. Inst. Civil Engineers," vol. cviii.

becomes less sensitive. In *accelerating* instruments, however, in which (see par. 59) either g or o, or both, are above the fulcrum, the wearing down of the middle knife-edge increases the sensitiveness by shifting the fulcrum upwards, and also compensates to some extent for the extra friction. For, to take the case in eq. 1 in par. 59, if the balance be accelerating, D is negative, and hence $W \times fg$ is greater than $2P \times fo$; g is above f, and o below it, and hence the wearing down makes fg smaller and fo larger, and diminishes the difference between $W \times fg$ and $2P \times fo$. Thus the numerical value of D is less and the balance more sensitive. A similar result can be proved in the other cases.

61. Moreover, if the knife-edges were *very* blunt, and the bearing on which it rested not horizontal, a slight error might be caused. The reaction of the bearing must be vertical, and as long as the bearing is horizontal, it will pass through the point o—the centre of the groove—about which the beam revolves, and which is the true fulcrum.

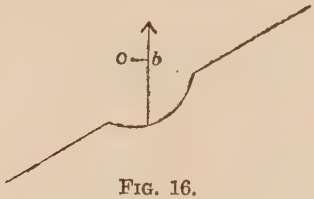

FIG. 16.

When, however, the bearing is inclined (as in Fig. 16), the reaction, still vertical, may pass to one side of o as shown and so cause a shifting of the fulcrum from o to b, and consequent inequality in the arms of the balance. Unless the edge is very blunt and the bearing much inclined, this will be a very slight error; but in any case the sharper the knife-edge the less will it be.

62. In ordinary balances plane bearings are not used. To avoid the inconvenience of want of stability due to the necessity for sensitiveness, the bearings in practice are curved in an oval or broad V-shaped form. The knife-edge has a narrower V-shape. When the beam is horizontal, or is

very nearly so, the stability is small. On the beam moving through a greater angle, friction prevents the knife-edge slipping in the bearing, consequently the point of contact is slightly shifted (as the edge rolls in the bearing) to one side, and an alteration in the fulcrum, like that described in par. 61, is introduced, which checks deviation and tends to restore the beam to the horizontal position.

WEIGHING WHERE GREAT ACCURACY IS REQUIRED.

63. In a sensitive balance the oscillations of the index take a considerable time before coming to rest. The index is read by taking the mean of several successive indications right and left alternately. To avoid the inconvenience of negative readings the scale is numbered in one direction only, say from left to right; usually the middle is numbered 10, and corresponds to the position of rest when the beam is horizontal, and the balance stands on a level plane. Care must be observed to take an odd number of successive readings, beginning and ending with the same side.

Illustration:—Let the successive swings be 2, 17, 4, 15, 6 respectively. Working from the first three alone we have, *left* 2, 4; *right* 17; the mean of 2 and 4 is 3; 3 and 17 give as the final result $\frac{3+17}{2}$ or 10 as the point at which the index will ultimately rest. A similar result is obtained from the other sets of three, viz. 17, 4, 15 and 4, 15, 6. If each reading be *accurate* these three results will be identical, viz. 10. But in practice, owing to the extreme accuracy required to read each swing, this result is impossible; the calculation is usually made by taking the mean of all the readings. To do this, all except the first and last must be reckoned twice over; thus, with the same figures as above, we have as the mean—

$$\frac{2+2\times(17+4+15)+6}{8}=\frac{2+72+6}{8}=10$$

The rule may also be thus expressed: *Halve the first and last readings, add these halves to the intermediate readings, and divide by one less than the number of readings.*

The balance should be carefully read in this manner when empty, and the result taken as the point which indicates equilibrium. Unless the balance is standing on a perfectly

level plane, this point will not be the middle point of the scale. By taking the point of equilibrium in this method, error from the plane supporting the balance not being level will be eliminated. The reading on the scale is best taken with eye as far from it as possible, so as to have the line of sight perpendicular to the scale. In some cases the scale is a mirror with the indications on its face. The reading is then taken when the pointer and its reflection are in line.

64. In weighings requiring great accuracy it is practically impossible to obtain the same indication of position of rest with weights, supposed to be equal, in the pans as when they are empty. This difficulty arises from the substance weighed not being exactly equivalent to a certain number of grains. The usual plan of weighing is as follows: first (the balance having been dusted and made level) the indication of the pointer for equilibrium is ascertained by the method described in the preceding paragraph. Then the substance weighed, and weights, to as approximate an equal amount as possible, are placed on the pans, trial being made with a series of small weights until the pointer swings to about equal distances each side of the reading for equilibrium. The second reading with the pans loaded is then taken as before. This will show that the weights used are slightly in excess or deficiency of the true amount. A grain weight is then removed or added as required, and a third reading taken. The difference between the second and third readings will correspond to one grain, and the error in the second weighing can then be deduced by simple proportion.

Illustration:—Let the index reading for equilibrium with empty pans be 10, the weights be used in the left pan and the scale numbered from left to right. If the second operation of weighing give the position of rest, as $10\frac{1}{2}$, the weights are slightly in excess. If on removing 1 grain the reading be 9, then $1\frac{1}{2}$ on the index corresponds to 1 grain. Hence $\frac{1}{2}$ represents one-third of a grain, and the weighing showed that the weights used were one-third of a grain in excess. This amount must be subtracted to arrive at the true weight.

The indication on the scale for one grain is taken, as above, when the scale is loaded, because, as has been

explained in pars. 48, 57, *ante*, pp. 26, 31, this indication or "sensitiveness" depends on the load.

Another method, adopted in chemical balances, of ascertaining small differences in weight, such as fractions of a grain, is described in par. 74, *post*, p. 41.

65. To avoid all risk of error arising from the arms of the scale-beam not being exactly equal, two methods of weighing have been devised. One is *Gauss'* method, in which the operation of weighing is repeated with the weights and substance in the pans being interchanged; the square root of the product of the two results giving the true weight. For, if W be the true weight, P and Q the apparent weights, as ascertained by the weights in the two weighings, and p and q the lengths of the arms of the balance, we have, taking moments in each case—

$$P \times p = W \times q$$
$$\text{and } W \times p = Q \times q$$
$$\text{dividing } \frac{P}{W} = \frac{W}{Q} \text{ or } W^2 = P \times Q$$

In the second, or *Borda's* method, the substance to be weighed is placed in one pan and the scale balanced by means of dry sand in the other pan. The substance is then removed and standard weights substituted till equilibrium is again restored. The weights represent the weight of the substance; the ratios of the lengths of the arms of the scale, if unequal, affect both operations in a like manner. The latter is the method recommended by the Board of Trade (Ins. 54). In both these methods, where extreme accuracy is required, the weighings are made, and the readings taken, as described in the two preceding paragraphs.

TESTING SCALES.

66. For the scales to be *just* it is absolutely necessary that the following conditions be fulfilled :—

(1) The beam with scale-pans attached should balance when empty;

(2) The distance* *pf* should be equal to the distance *fq*, and

(3) The pans should hang freely from the beam.

If the first condition be not fulfilled, then whatever weight would be required to balance the empty scales will be the amount of error in every weighing. If the second be not fulfilled, the effect will be that every weighing will be incorrect, not by the same amount, but in the same proportion. Thus, if *fq* be longer by one per cent. than *fp*, and if the substance be weighed in the pan on the former arm, the weight being in the latter, the purchaser will be defrauded by one per cent., the deficiency in 100 grains being one grain; in 300, three grains, and so on. In testing all weighing instruments it is advisable to do so in a systematic manner commencing with the smallest, and proceeding regularly to the largest weights, with which it is proposed to test the given instrument. It is of the highest importance to see that the instrument stands on a level plane. If not, and the ordinary zero be used, there will be an error, the amount of which will depend on the sensitiveness of the instrument. This error may or may not vary with the load according to the sensitiveness of the instrument. If a working zero be taken according to par. 63, this error will not arise.

67. The equality of the distances *pf* and *fq* need not be measured, but can be more easily ascertained by putting equal standard weights in the pans. If the arms *fp* and *fq* be unequal the weights will not balance, since their moments round *f* (*ante*, par. 26) will not be equal. A balance that is false or unjust has been defined by the Lord Chief Justice as one "which will not hang true when there is nothing in either scale, and will not hang true when an equal weight is put into the goods scale on one side and the weights scale on the other" (*L.C.C.* v. *Payne*, 1905, 1 K. B. 416). If the deviation be slight and it is doubtful whether the error be due to the scales or the weights, the latter should be changed, each being put into the opposite pan. If the deviation then be in the

* The references are to Fig. 11, *ante*, p. 22.

opposite direction the error is due to the weights used being inaccurate.

68. Some scales in common use are put together first and then balanced; the balancing being done by altering the weight of some part which hangs either from *p* or *q*. Instruments so made may be quite correct and yet the beam not balance by itself nor the pans by themselves.

69. If an instrument has its pans interchangeable, as, for instance, by being hooked on, the probability is that it will not balance when the pans are changed; if this be so, then the instrument is so constructed as to "facilitate the perpetration of fraud" (see sect. 5 (1*a*) of the Act of 1904). But an instrument so balanced may happen to come under the class described in par. 72 below.

70. On the other hand, if an instrument balanced in this manner have the pans and chains suspended from the beam by rings which are closed to prevent the changing of the pans, the inspector has no power to condemn it as being unjust or as "facilitating the perpetration of fraud," merely because he can by taking it to pieces and constructing another instrument make an unjust pair of scales. Scales made as described in par. 68 may be perfectly correct, and fulfil the necessary conditions stated above in par. 66. The distances *pf* and *fq* (Fig. 11, *ante*, p. 22) may be equal, but by taking the instrument to pieces and changing the pans the first error may be introduced. But in this respect the decision of the Board of Trade as to any particular type of instrument is final, and the inspector is bound by their Regulations; it is only when a weighing instrument does not come under the Regulations that an inspector is called upon to act on his own judgment.

71. The case *Henton* v. *Radford* noted on p. 159, *post*, is an illustration in point. It does not appear from the report whether the second pair of scales was incorrect by reason of the inequality of the length of the arms, or whether the error was introduced as mentioned in the last paragraph. In the

latter case it is extremely doubtful whether the instrument should have been condemned (see pars. 69, 70). It is not necessary to change the scale-pans to ascertain if the arms of the beam are of equal length (see par. 67).

72. Those scales which are more carefully constructed have their beams, *pq*, balanced first, and then the suspended portions balanced separately. In such instruments the pans may be interchanged without introducing any error.

73. In making a pair of scales it must be remembered that filing off one grain at the extremity of the beam, as *p*, or off a pan, has the same effect as filing two grains off midway between *p* and *f*, or as filing three off at a point distant from *f*, one-third the distance of *fp*, and so on. This follows from the principles in pars. 21 to 26 above. Consequently, if the beam be much out of balance, less filing will be required at either *p* or *q*, than at any other point, to bring it nearly to equilibrium, but when the balance is nearly attained, it will be more easy to hit it off exactly by filing near *f*, than nearer the extremity of the beam.

74. In balances used for purposes where extreme accuracy is required, the principle illustrated in the last paragraph is made use of. The smaller differences in weight are estimated, not by adding very small weights on the pans, but by sliding a small wire weight called a "rider" along the beam. For this purpose the beam is graduated, and the weights indicated by the rider in its various positions are marked on the graduations. The principle is that of the steelyard, to which reference has already been made (par. 25), and which is described more fully in pars. 98 to 103.

75. In a perfect balance in which there is no friction or resistance to rolling (par. 37) the sensitiveness is definite according to the construction of the instrument. In actual practice these forces come into play and diminish the reading or deviation which would otherwise indicate the true sensitiveness. If the instrument be not accurate enough for use it is immaterial to the user what the cause of error may be.

In practice, therefore, the term "sensitiveness" is not used in its strict mathematical sense, as explained in pars. 47, 57, but to mean the smallest excess of weight which will move the beam a prescribed amount. This may be the minimum which will move the beam so as to lead the inspector to conclude that the apparent movement is caused by the added weight, and is not due to any error of observation on his part, and may be termed an "appreciable amount." In testing a balance the inspector must follow the detailed directions given in the Regulations of the Board of Trade. The errors permissible on verification are given in Tables XIII. and XIV., *post*, p. 304.

76. The sensitiveness depends on any or all of the following causes—

(1) The weight and shape of the beam and pans, the effect of which will be constant for all loads.

(2) The relative positions of the fulcrum and end knife-edges, the effect of which will vary with the load.

(3) The nature of the contacts at the bearings, which may produce an effect in part constant and in part depending on the load.

The effects due to these causes may be in a great measure distinguished by proceeding in the following manner. Make a series of tests with loads differing by the same weight (say 1 lb. or 2 lbs.) according to the capacity of the instrument tested. Ascertain in each case as precisely as possible the additional weight that will move the beam the same definite but small amount. Tabulate the results, beginning with the highest weight. Each of the series of excess weights will be partly constant and partly depending on the load. Subtract each item from the next above it in the table. The constant element will be thereby eliminated, and there will be the differences of added weights for a certain difference in the loads used. If these differences of added weights are not practically equal their condition (2) above will have been altered, due probably to the bending of the beam under the increased loads. If they are equal (within the limits of errors of observation) they show how the sensitiveness will depend on the load.

THE ROBERVAL BALANCE.

77. The difficulty of constructing balances which will weigh correctly, having their pans above the beam and not suspended, has been already pointed out in pars. 34, 35. Many instruments of this class are different forms of one mechanical principle or device invented by Roberval * in the year 1670. As it appears now in many forms such as counter, imperial, and cotton machines, and so forth, it is here described in detail in principle, and the essentials for its efficiency pointed out, with modes of testing its accuracy.

78. The simple mode of getting over the difficulty in Roberval's balance is by using a second beam below the first and of the same length. Thus, in Fig. 17 (which is drawn merely to illustrate the principle, the supports, bearings, and casing being omitted) AB is the balance-beam

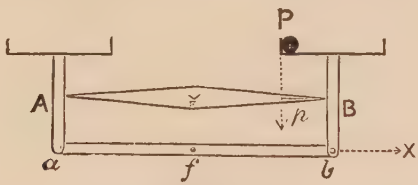

FIG. 17.

having its fulcrum with knife-edge bearings at F. The pans are not rigidly attached to the beam (as in par. 34 and Fig. 9 above), but are supported and balanced on knife-edge bearings. The stems, or legs (as they are usually called) are continued down to *a* and *b*, the extremities of the lower beam, and are there loosely jointed so as to allow of free motion of the pans up and down, the lower beam turning on its fulcrum *f*, which is vertically under that of the balance-beam. The lower beam *ab* need not necessarily be a single beam, but may consist of two portions, *fa* and *fb*, called

* The inventor was a Monsieur *Gilles Personne*, subsequently called *G. P. de Roberval*, after the village of *Roberval*, near Beauvais, where he was born in 1602. He was one of the greatest mathematicians of his time.

"stays." These stays are usually made separate. The loose joints at *a* and *b* consist of knife-edges so arranged that the motion is perfectly free, and thrusts along *fa*, *fb*, or tensions along *af* and *bf* can be exerted as required. The weights of the pans are entirely borne by the upper beam. In the original form of this balance the pans were fixed horizontally and rigidly to and outside of the legs A*a* and B*b* respectively.

79. The points A and B where the bearings rest on the knife-edges of the beam in this form of balance correspond to the points P*a* and Q*a*, P*b* and Q*b*, or P*c* and Q*c*, in Fig. 10 and par. 38 above, as the case may be.

80. In this form of instrument the pans keep horizontal when the beam is depressed. Each pan moves parallel to itself, that is, keeps horizontal throughout the motion of oscillation of the beam. Now if a weight P be placed on the side of the pan, it produces a downward pressure at B, and also forms a couple (see par. 34 above) whose moment is P multiplied by *p*B, which couple tends to turn the pan round B. As the pan is not rigidly attached to the balance-beam, the couple has no effect on the latter, but, tending to turn the pan round B, it produces a pressure of the lower end of the leg outwards at *b*. If the amount of this pressure be X, say, then the moment of X round B, that is X multiplied by B*b*, is equal to that of P round B. The force X is that with which the stay *ba* pulls in the end of the leg B*b*, and so counteracts the turning force of P in the pan above. In the ordinary balance the second beam or stay *ab* is placed out of sight in the framework. Sometimes two stays, *fa* and *fb*, one for each side, hinged at *f*, are used instead. These have the same effect.

Illustrations :—If the half beam FB be 10 ins. long, and the pan be 4 ins. wide, then *p*B is 2 ins. Now if B*b* be 8 ins., that is, four times *p*B, then a weight P of 8 ozs. will produce a downward pressure of 8 ozs. at B, together with an outward pressure of 2 ozs. along *fb*. This latter in no way interferes with the balance of AB, but if the pan were rigidly attached to FB, then 8 ozs. at P (which is the same as at *p*) would only be equivalent to 6·4 ozs. at B.

81. The essential feature for accuracy in this balance is that each pan shall move parallel to itself. This can only be effected by having *fa* and *fb* each equal and parallel to FA and FB. In Fig. 18 let B and *b* be the knife-edges, F the fulcrum of the beam, and *f* that of the stay, P a weight placed on the outer edge of the pan at B. Fig. 18 (2) (in which the same letters indicate the same points as in Fig. 18 (1)) represents the forces brought into play by P being placed on the edge of the pan instead of the centre. P tends to turn the pan round B, a thrust (*bn*) along *fb* is thus created; the moment of *bn* round B being equal to that of P round B. To investigate the reactions at B, let there be

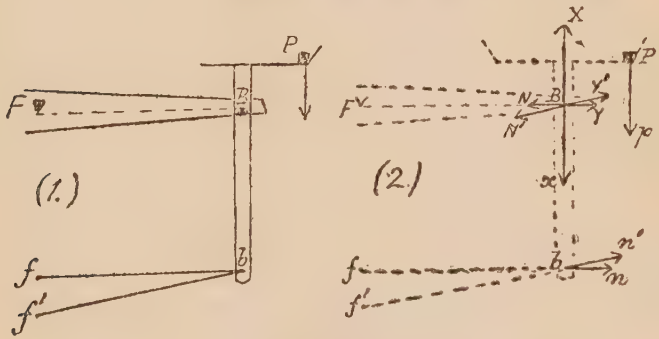

FIG. 18.

introduced two equal and opposite forces, B*x* and BX, each equal and parallel to the weight P*p*. P at the edge is therefore equivalent to its equal B*x* at B and the couple formed by BX and P*p*. This couple must be balanced by another. If at B (Fig. 18 (2)) two forces, BN and BY, each equal, and parallel to the thrust *bn* at *b*, be introduced, the forces *bn* and BN form the couple which balances BX and P*p*. There is left the force BY which tends to displace the bearing on the knife-edge. If BY be in the same line as FB, this has no tendency to turn the beam and will not interfere with the weighing. But if the stay be not parallel to the beam, say *f'b*, then this force will have an effect on the beam. Taking the case in the figure, BY' will be parallel to *f'b*, and as BY' is directed upwards from FB it will tend to raise the

pan or lighten the pressure of the bearing on the knife-edge. P will in such a case apparently weigh less the further away from the fulcrum F it is placed, and conversely it will appear to weigh more if placed on the side of the pan near F. Since the moments of the couples must be equal, the longer the leg B*b* is, the less the force *bn′* or BY′ is, and consequently the less the error. Hence the legs should be as long as the instrument will conveniently allow of. The force BY must be taken into consideration, in shaping the bearings in the first instance, as it tends strongly to displace the bearing. This force is small when B*b* is large.

82. The results of want of parallelism of the stays and the beam may be further illustrated by the diagrams in Fig. 19. In these the lettering corresponds to that of Fig. 18, and the explanation given in the preceding paragraph applies. The beam B′FB is supposed to be horizontal in each case. Other diagrams might be given showing the effect of the error in construction on one side of the balance only, the other having the stay equal and parallel to the line joining the knife-edges on the beam.

In diagram (1) right side weighs heavy and left light.
" (2) right side weighs light and left heavy.
" (3) both sides weigh heavy.
" (4) both sides weigh light.

It will be observed that when a weight is placed on the outer edge of the pan it will appear light when either the leg is too short, or the fulcrum *f* of the stay is too low, and it will appear heavy when the leg is too long or the fulcrum of the stay too high. The reverse effect is produced when the weight is placed on the inner edge of the pan. When the direction of the pull or thrust of the stay on the leg (*bn′*) tends upwards the weight appears too light, and when downwards too heavy.

83. Error will also be introduced if the stay *fb* is not equal to FB, but it is not nearly so large. From pars. 81 and 82 it appears that the error depends on the stay not being parallel to the beam, and therefore exercising a pull

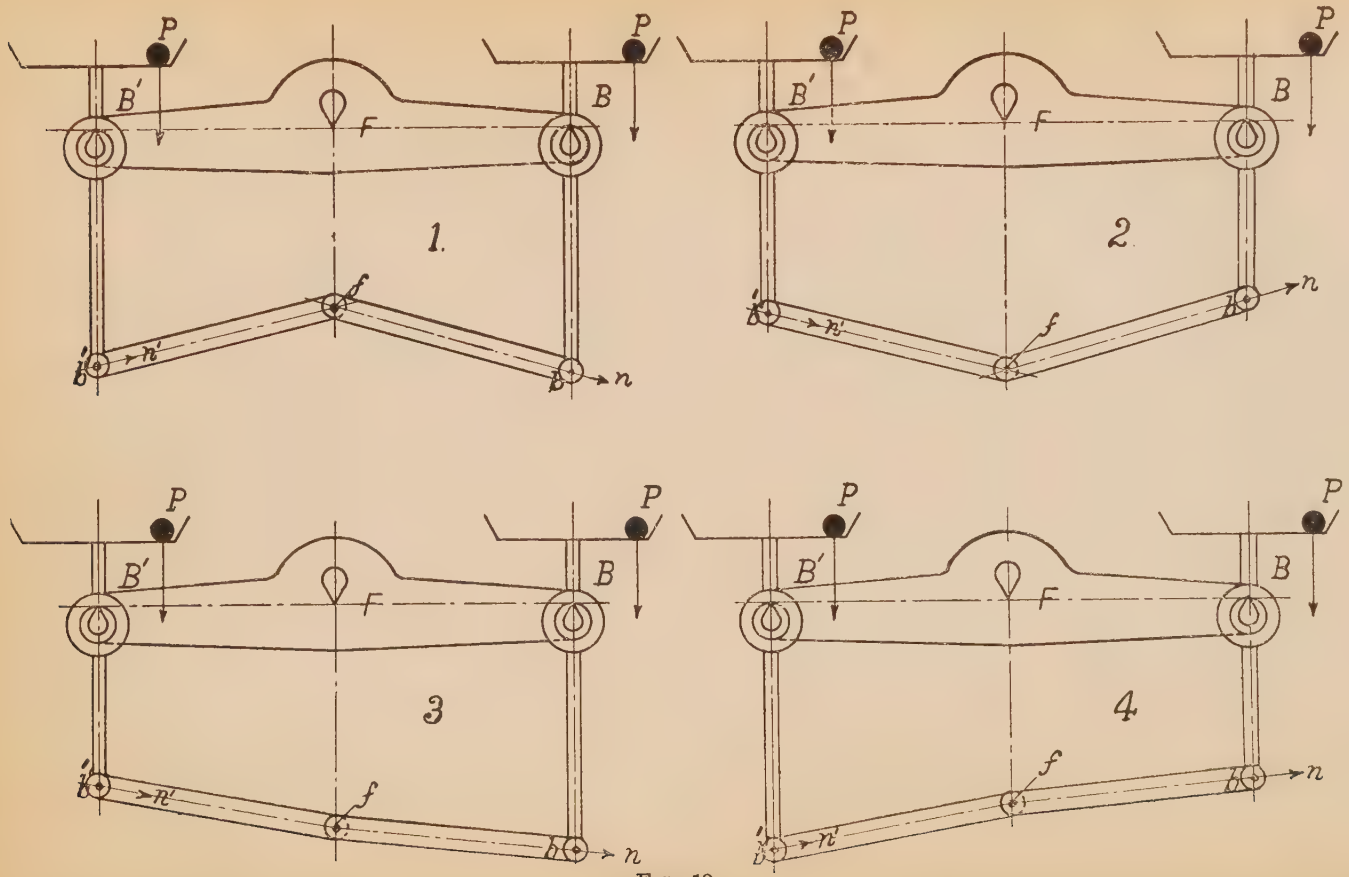

FIG. 19.

or thrust, part of which tends to raise or lower the end of the beam. In Fig. 20 (1) the beam is horizontal and the stay fb parallel to it. In that position the reaction of the stay has no effect on the beam. But it is otherwise when the beam is deflected, as fb will no longer be parallel to FB when both are deflected. Suppose that it might be possible, Fig. 20 (2) will illustrate the position of the deflected beam, the beam being deflected through an angle θ and the stay through an angle ϕ by reason of its connection B′b′. Suppose that the angles θ and ϕ are equal, then fb' may for the purpose of demonstration be taken as parallel to FB′. If b′C′ and bC each be drawn

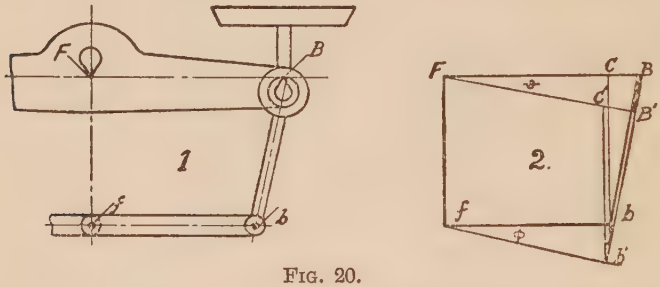

FIG. 20.

parallel to fF two parallelograms will be formed, *viz.* FCbf and FC′$b'f$, and bC will be equal and parallel to b'C′, each being equal and parallel to fF. But B′b' and Bb are equal, and also BC is equal to B′C′, each being the difference in length of the half beam and the stay. Therefore the triangle B′b'C′ should be equal in all respects to BbC, but it is not, since the angles at C are right angles, and those at C′ are not. Therefore the position of the stay fb' cannot, as was supposed, be parallel to the beam FB′.

To ensure accuracy, therefore, fb must not only be parallel to FB but also equal to it. For it is only in that case that it remains parallel to FB when the beam is deflected. The error arising from fb being too long or too short is very small when compared with the error arising from a variation in the length of the leg, or in the height of the fulcrum f of the stay.

Testing a Roberval balance.

84. The Roberval balance may be made either accelerating or vibrating according to the position of the knife-edges on the beam, as in the case of ordinary beam scales. If incorrect the causes of error may be discovered experimentally in the following manner.

If the balance is true when equal standards are placed in the centres of the pans the beam is correct. If it balances also when equal weights are placed either both on the outside or both on the inside of the pans it may be correct, or both sides may be faulty, as shown in Fig. 19 (1) and (2), and each side to the same amount. If the latter is the case it will become apparent immediately on moving one of the weights to the opposite edge of the pan, producing the state of affairs illustrated in these diagrams, when the beam will be at once depressed. In that position the weights exercise their maximum excentric effects. The requisite adjustment can then be made by raising or lowering f as the case may require, or altering the length of the legs.

Or the instrument may balance when one weight is on the inner edge of one pan and the other on the outer edge of the other. In such a case the instrument is either just, or faulty as shown in diagrams (3) or (4) of Fig. 19. If the latter is the case it will be at once apparent on moving one of the weights to the opposite edge of the pan. The weights will then have their maximum excentric effects, and the beam will be depressed. The correction must be made by altering one or both of the legs.

Or each pan may be tested separately. To do this one standard weight is placed on the pan centrally, directly over the knife-edge. The other is then placed on the inner, or on the outer edge, of the other pan. If it appears just in either position that side is correct. The first pan can then be tested by moving the other standard to either edge. It should be noted that the first weight may be placed anywhere on the first pan; if the second shows the same amount of error with the standard on the outer or inner edge then it is correct, and the error so shown is due to the incorrectness of the first pan. The incorrectness in the length of the leg (or height of fulcrum

of stay, which produces the same effect) always produces on its own pan the effect of making a weight appear too heavy on one edge and too light on the other.

If the balance be correct it will satisfy one simple test. Place equal standard weights on the outer edges of each pan, then move the standard on one pan to the inner edge. If the instrument balances in both these tests then the stays are parallel and equal to their respective arms of the beam, and the legs are of correct lengths.

85. The approximate amount of errors from the foregoing

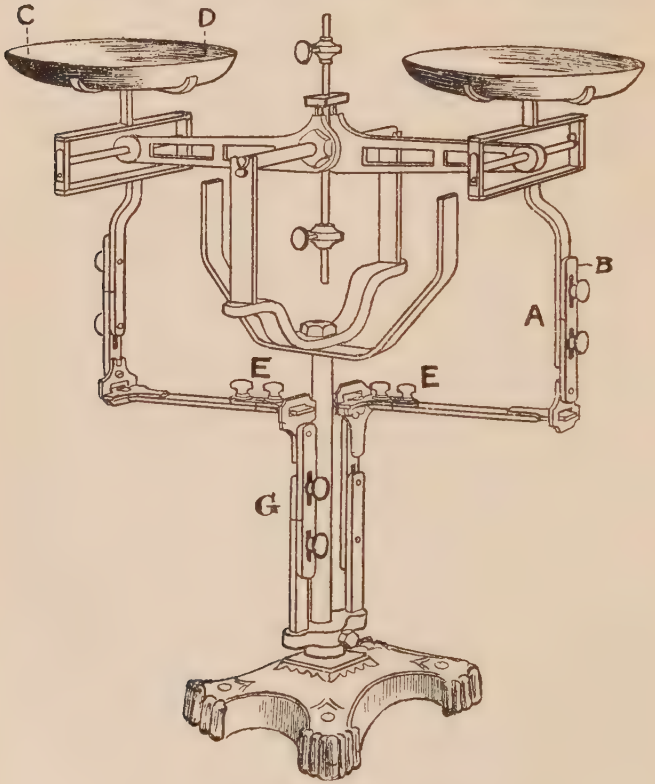

FIG. 21.

causes may be shown by experiment on the balance shown in Fig. 21. The beam was $15\frac{1}{2}$ inches long between the extreme

knife-edges. The legs of the pans were 7 inches long. These were constructed, as shown in the diagram, with a sliding arrangement, AB, in each leg, so that it could be lengthened or shortened by any small prescribed amount. The stays of the instrument were capable of a similar adjustment, at E, and so were the upright supports of the stays' ends lower down, at G.

Experiments:—The leg under CD was made $\frac{1}{8}$ of an inch short, and 7 lb. weights placed centrally in each pan balanced. One weight was moved outwards $1\frac{3}{4}$ ins. towards C, and was then $\frac{1}{2}$ oz. apparently light. On moving it to D, the corresponding position on the inside, it required $\frac{1}{2}$ oz. added to the other pan to balance it. The experiment was then repeated with 4 lb. weights moved $1\frac{1}{2}$ ins. in a similar manner, with the following results:—When the leg was $\frac{1}{8}$ in. short a displacement of the 4 lb. $1\frac{1}{2}$ ins. towards C made it apparently 6 drams light, and when similarly moved towards D it was 6 drams too heavy. On shortening the leg by another $\frac{1}{8}$, that is, $\frac{1}{4}$ in. altogether, the variation was produced in like manner, but of 10 drams instead of 6. The experiment was repeated by lengthening the leg the like amounts with the same results, but in the opposite directions respectively, *viz.* the weight appeared heavy which before was light and *vice versâ*.

The stays were similarly altered, but no apparent effect was produced. This was because the stays and beam were very slightly disturbed from remaining parallel. See par. 83.

From the foregoing experiment it is seen that the amount of error depends on the load. This is seen by Fig. 18 (2), in which the force BY′ will be proportional to the weight P. The shorter the leg is the greater the angle between the correct (fb) and incorrect ($f'b$) position of the stay, and the greater the effect of BY′ in raising that end of the beam. Instead of shortening the leg the same effect would be produced by lowering the end f of the stay (see Fig. 18).

86. In counter machines the beam is usually made double. When the weight is placed on the side of the pan over the bearings, in a somewhat similar manner, forces like BY are brought into play, and dislocate the action of the stays. This may be prevented by making the stays double, one for each side of the double beam above. Instruments so constructed should give correct results wherever the weights are placed on the pans.

INVERTED BALANCES.

87. These instruments are another form of application of the principle of the Roberval balance, the only difference being that the legs (or "pillars" as usually called) and stays are placed above the beam instead of beneath. Imperial and Cotton machines are the chief illustrations of this class. The mechanical action and conditions for accuracy are the same.

88. In Fig. 22 (for the sake of clearness supports are omitted) F is the fulcrum of AB, the balance-beam. The bearings of the pans are supported on knife-edges at A and B. Two upright pillars are rigidly connected with the pans, and are loosely jointed at *a* and *b* to stays working freely on pivots at *f*. The pillars from the pans to *a* and *b* may be of any convenient shape. The action is exactly similar to that of the corresponding parts in Figs. 17 and 18, as the "pillars"

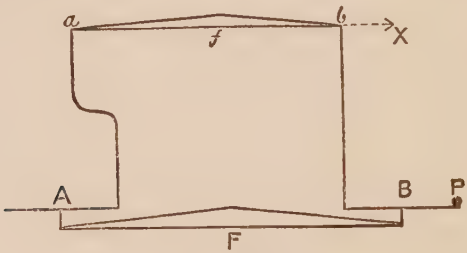

FIG. 22.

perform the same function as the "legs" in those diagrams. Thus a weight at P produces a downward pressure at P and B, and a couple tending to turn the arm B*b* outwards and producing a tension, X, along *fb*, such that the moments of P and X round the pivot at B are equal. This force X is that with which *bf* pulls in the pillar so as to keep the pan level. This, like the last, may be either a vibrating or an accelerating instrument.

89. In practice the stays *fa* and *fb* are made separate, and frequently the hinges or fulcra are placed so that the stays cross each other, and the whole occupies only the length *fa*. This is illustrated in Fig. 23, in which only

the essential features of the instrument are shown. The shapes and lengths of the pillars or legs, A*a* and B*b*, are quite immaterial; they need not be the same. But the condition essential for accuracy is that the lines joining the knife-edges *fa* and *fb* shall be equal and parallel to the

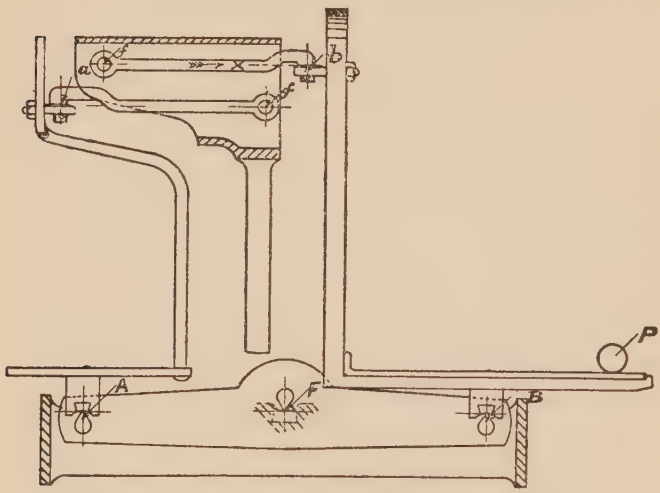

FIG. 23.

lines FA and FB respectively. The explanations in pars. 81, 82 as to causes of error apply also to inverted balances, which have the additional advantage of having their "legs" or pillars longer, and consequently (as explained in par. 81) the effects of error due to any want of parallelism of *fa* and FA is much less.

The principle of testing is the same as that described in par. 84 above.

TESTING ACCELERATING BALANCES.

90. Counter and similar machines are usually made of the accelerating type. In testing an instrument of this class it must be remembered that there is an essential difference between its behaviour and that of a pair of scales. In the case of the scales, the test merely ascertains the amount

necessary to overcome friction and move the index appreciably from the point indicating that the scale is balanced. Accelerating instruments are cases of unstable equilibrium, so the beam must be propped up at a small deviation from the point of true balance. A certain force is required (in addition to that needed to overcome friction) to move the beam over the point of balance, or "dead" point. The relation between this force and the angle of deviation is explained in par. 59. By making a proper proportion between the distances of the centre of gravity of the beam *g* and the centre of load *o* and the fulcrum *f*, the extra weight required to turn the scale may be made as small as required. Similarly the formulæ in par. 59 give the amount of extra weight required on the weights-pan (not including that necessary to overcome friction) to bring the goods-pan up again off its stop. The instrument tested should turn within the limits laid down by the Regulations in force on 30th September, 1907, in *both* these processes; for sellers have been known to put weights on first, then too much of the goods to depress the pan, and finally to "weigh up" by taking off the surplus till the goods-pan rises again. The excess weight *usually* required on the weights-pan to raise the goods-pan is more than is required to bring down the goods-pan in the first instance. It is for this reason that, in future, accelerating counter machines are prohibited (Reg. 84), existing instruments being allowed for ten years, thereafter dropping out as they become inaccurate. Balances can be so constructed that they turn with the same amount "weighing up" as when used in the ordinary way. *See* Reg. 62, *post*, p. 272.

91. It is important that these accelerating instruments be used and tested when standing on a level plane. If the instrument be placed on a slanting base or tilted so that the weights-pan is higher than when the instrument is on a level plane a considerable error will be introduced which will be against the purchaser. The operation of weighing by causing the goods-pan to be depressed is really a toppling over of the beam that rested on a stop under the weights-pan. If that side of the instrument be already raised improperly by the base

being out of level it will be partly toppled over, and a much less weight will cause motion to ensue. If there is any reason during inspection to suspect this source of error the instrument should be tested also when turned round so as the slant of the base will affect the instrument the other way. The amount of the error introduced will depend on the length of beam and height of extreme knife-edges above the fulcrum of the beam when it is level.

92. It is important in verifying instruments made on the Roberval principle, whether they be vibrating or accelerating, or whether inverted or not, to remember that an instrument which gives different results when the weights are placed on different parts of the pans is unjust: *R.* v. *Baxendale* (noted on pages 156, 159, *post*). The following test will be sufficient to show if the stays and legs or pillars are properly constructed and arranged. Place a standard weight on or near the outer edge of one pan, and a like weight on the outer edge of the other. Then place one of these weights on the inner edge of its pan. If they balance in both tests the machine is correct, if they do not satisfy both tests then further tests may be made in accordance with par. 84 to discover the source of the error.

93. Instruments of this class are usually made with the beam double (*see* Reg. 85). If the instrument be perfect it will be correct when the equal weights are placed anywhere on the pans, *e.g.* at edges or corners, and over the bearings. In practice the extent to which accuracy is to be expected when the testing weights are placed in positions other than the centres of the pans depends obviously on the limits of error allowed for accuracy and sensitiveness. The prescribed mode of testing is described in detail in Regs. 90, 91, *post*, p. 278.

BOX, FRENCH, AND NATIONAL MACHINES.

94. The French balance is an illustration of another method of getting rid of the difficulty described in pars. 34, 35 above. This method is also known as Beranger's principle.

The parts are shown in Fig. 24 in such a manner as to illustrate the principle on which the instrument works. PZ is the balance-beam, F its fulcrum, with the usual knife-edge bearings. The right-hand side of the instrument is not shown in the figure; it is a counterpart of the left. The levers

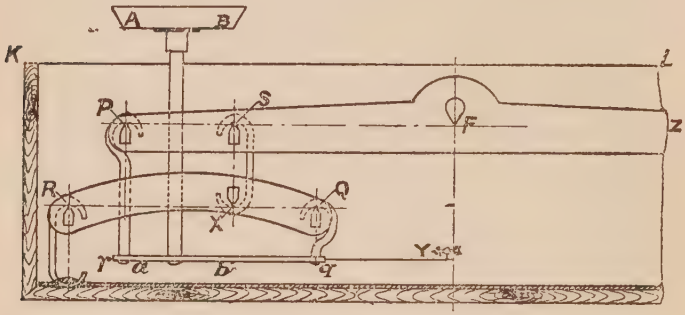

FIG. 24.

are sketched roughly. In practice the whole arrangement is doubled; a double-balanced beam, between which the levers are so placed, and made of such a shape, as to admit of the free movement of the scale-pan AB, which is attached to the bar *ab*, up and down without coming into contact with the lever RXQ.

KL is the lid of the box. There are knife-edges at P, the extremity of the balance-beam; on these there freely hangs one end of the bar P*rabq*, to the other end of which (*q*) is attached a link or hook suspended on a knife-edge at Q, the extremity of the lever RXQ. This lever is a rod or bar which is suspended by a link SX from a knife-edge at S. At X there is also a knife-edge resting in the lower end of the link. R is a fulcrum, which usually consists of a hook or link bearing on a knife-edge at R, and connected at its lower extremity with the bottom of the box. The lever RXQ works with the point X vertically under S. A pointer Y projects from *abq*, and serves as an index visible from outside the case.

As the beam and levers are made double, the lever RXQ need not be so far below PSF as is shown in the diagram, which is here given to illustrate the principle. In some

forms of this instrument the lever RXQ being double falls inside the double beam, and the point X bears directly on a knife-edge on a bar across the double beam at S; the points P, S, R, X, and Q then lie in one plane. This form of instrument is very compact.

The main point in the whole arrangement is that the *ratio* of QX to XR must be the same as that of PS to SF.

If a weight be placed at either A or B on the scale-pan, it produces the same effect as if placed on the rod P*abq*, at either of the points *a* or *b*, which are respectively vertically under A and B. If the weight be supposed to be placed at any point on *rq*, it has the same effect as if part were at *r*, and the remainder at *q*. The proportion between these parts will depend on the position of that point on *rq*, at which the whole weight is placed. That portion which is supposed to act at *r* may be considered to act at P, which is vertically above *r* (see par. 17). The remainder may be considered as acting at Q (par. 17).

For the sake of illustration, suppose RX to be three times XQ, and FS three times PS. Now, 3 lbs. at Q will, on the principle of the lever (see pars. 21 and 28), be equivalent to 4 lbs. at X—that is, the same as 4 lbs. at S, which is vertically above X. And in the same way, since FS is to FP as 3 to 4, 4 lbs. at S are equivalent to 3 lbs. at P. Hence, so long as the ratio of RX to XQ is the same as that of FS to SP, that portion of the weight which acts at Q produces the same effect as if it were suspended at P. Hence the whole weight, placed anywhere on AB, acts as if it were suspended at P. The effect on the balance-beam is, therefore, independent of the distance of the weight from the fulcrum. It is easy to see that any alteration of the proportion of RX to XQ, by moving R or otherwise, will at once make the balance unjust, and likely to "facilitate the perpetration of fraud."

96. When this instrument is perfect it remains balanced when the standards are placed the one on the outer and the other on the inner edge of the scale-pans. The lever should be inspected to see if there are any signs of the fulcrum R having been moved, or the proportion of the parts having

been in any other manner altered. When this occurs a change of the position of the standard on the pan will destroy the balances. The tests to be applied in practice are contained in Regs. 61, 62, 88 to 92. French balances are vibrating instruments, and are for this reason in demand.

97. The principle adopted in the French balance of compensation by the two levers in conjunction, has been also applied in the different manner in the Quintenz machine. In Fig. 25 a sketch is given, merely for the purpose of

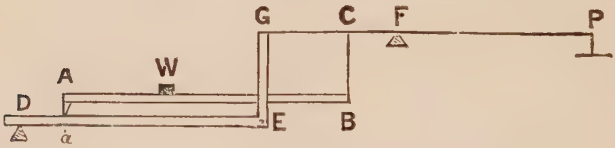

FIG. 25.

illustrating the principle which, in actual instruments, may be modified in the manner of its application.

It is a compound lever machine. AB represents the platform on which the article to be weighed is placed; the end A rests on the lower platform DE, and B is vertically under the point C on the lever GF. BC and GE are the connection rods, jointed so as to allow of free motion.

One end of the lower platform rests on the fulcrum D, the other is suspended from G by the rod EG; F is the fulcrum of the upper beam. The essential feature in this contrivance is that the ratio of D*a* to DE must be the same as that of CF to GF. If this be the case, then the machine gives a result independent of the position of W, the article weighed on the platform. For W acts at A and B, and the distribution of the weight between these points depends on the position of W on AB. Since B is vertically under C, that portion of W which acts at B may be considered to act at C. Suppose W is 7 lbs., 4 of which act at A and 3 at B, the 3 lbs. at B is equivalent to 3 lbs. at C. Now, suppose for example that DE is four times D*a*, and GF four times CF, then 4 lbs. at *a* is equivalent to 1 lb. at E (by the principle of the lever explained in par. 21 above), and may be considered to act as G, which is vertically over E.

Since GF is four times CF, 1 lb. at G is equivalent to 4 lbs. at C. Hence the machine acts as if the whole weight of 7 lbs. were at C, however it may have been distributed between A and B. The counterpoise weights requisite to measure the weight at C are placed on the pan at P; or PF may be fitted as a *steelyard*, which is next described.

STEELYARDS.*

98. The principle on which these instruments are constructed has already been given in par. 25 above. Fig. 26 (1)

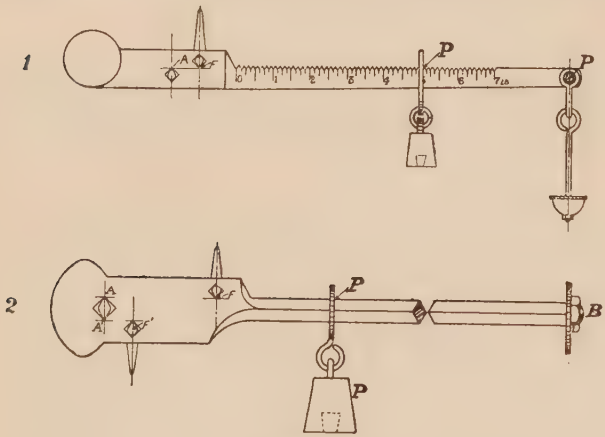

FIG. 26.

is a sketch to illustrate the principle of the simplest form of steelyard.

The instrument consists essentially of a lever, of which F is the fulcrum. (The bearings and supports are omitted for the sake of clearness.) A graduated scale parallel to FP extends along the longer arm; it is divided into an equal number of divisions; *p* is a counterpoise, which may be suspended freely from any given point in the scale. On the shorter arm is a knife-edge A on which hangs the part carrying

* Illustrations of Roman steelyards will be found in a paper on Roman Weights and Measures in vol. ix., p. 245, of the *Monthly Review*. The diagrams are the work of Mr. G. W. Davis.

the load to be weighed. At the extremity of the long arm is a pan P on which various weights may be placed. This pan is also suspended from a knife-edge. The three knife-edges are in the same plane.

99. From the principle of the lever (pars. 21, 28), it follows that the moment round F of that part of the instrument which is on one side of F, must be equal to the moment of the rest of the instrument round F. When there is no article being weighed the instrument should balance with the sliding counterpoise *p* at O, the zero of the scale. If this be not the case, the instrument is unjust.

100. When an article is being weighed, the parts of the instrument which are subject to alteration are—the amounts of the weights placed in the pan at P, and the distance of the counterpoise *p* from the fulcrum F. These must be considered separately.

101. Suppose the instrument to be balanced when empty, with the sliding poise *p* at the zero of the scale. Now if FP be 20, and AF 2 inches, then 1 lb. at P will balance 10 lbs. hung from the knife-edge at A (see *ante*, pars. 24, 25), since 1 multiplied by 20 is equal to 10 multiplied by 2. If the metric system be used on such an instrument, a kilogram (1000 grams) at A would be measured by 100 grams at P, 2 kilograms by 200 grams, and so on. The arrangement shown hanging from the knife-edge P is now mainly used on steelyards that form part of platform machines or weigh-bridges.

102. Differences in weight can also be measured by means of the sliding poise *p*. Suppose in Fig. 26 (1) AF as before to be 2 inches, the distance from F to the zero graduation also 2 inches, and the length of the graduated scale to be 14 inches, then if the poise *p* weigh, say 8 ozs. and balance the instrument when nothing is being weighed, the fourteen inch divisions on the scale will represent half-pounds. For, when the machine is balanced empty, the moment of the weight of *p* round F will be represented by 8 multiplied by 2,

and 16 therefore will also be the moment of the weight of the steelyard itself round F, only in the contrary direction. In each case the moment is 16. Now if *p* be moved through 10 inches (as shown in Fig. 26 (1)) it will be 12 inches from F, and its moment round F will be 12 times 8 or 96. This moment is balanced by those of the steelyard and the load weighed; the former is 16, therefore the moment of the load weighed is 80. As AF is 2 inches, the load acting at A must be 40 ozs. or 5 lbs. The load at A therefore is proportional to and measured by the distance from the zero of the scale to the notch where *p* rests. The whole scale of 14 inches represents 7 lbs., and each minor division of a quarter of an inch represents 2 ozs. The length of the scale from zero to the graduation at which *p* rests is proportional to the weight of the article weighed, only when the instrument when empty of load balances with *p* at the zero of the scale.

The form of steelyard shown in Fig. 26 (2) is that which is known as "reversible." As drawn it is used for weighing lighter articles; F is then the fulcrum, and the load weighed acts at the knife-edge A. For heavier goods it is turned upside down; the fulcrum is then F′, and the load acts at A′. There are two corresponding scales on the longer arm. If AF is 5 times A′F′ then the divisions of the scale on the upper side of the longer arm represent weights one-fifth of those represented by like divisions on the lower scale. A weight at A would have five times the effect it would have at A′ when the steelyard is reversed. Steelyards of this form can only be stamped if of a pattern previously approved by the Board of Trade (Reg. 104 (*a*), *post*, p. 282).

103. In practice, the number of divisions on the scale, the weight of the sliding counterpoise, and of those used at P, depend on the object for which the steelyard is constructed. In many instruments there are two knife-edges from which the thing weighed may be suspended, one for heavy and the other for light goods, the scale readings being doubled to correspond—one for each class of goods. Steelyards are much used in combination with weighing machines, so that

very large weights may be measured by means of others which are comparatively small. They have also been con-

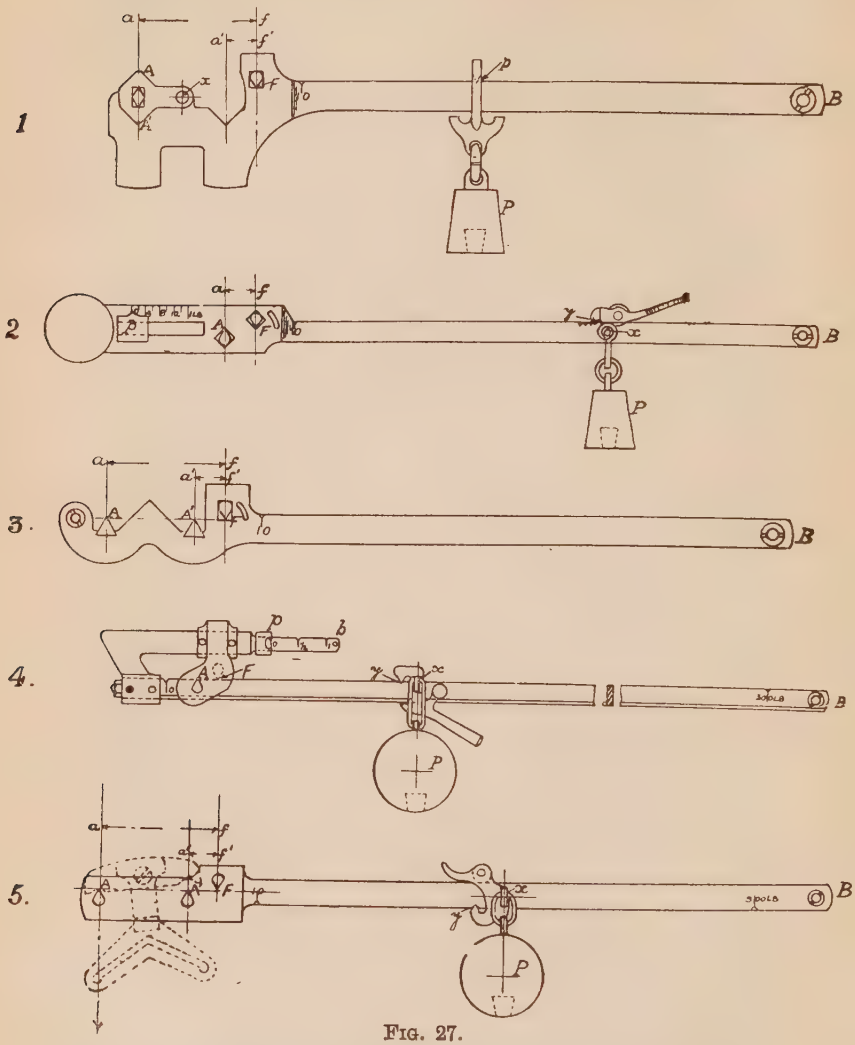

FIG. 27.

structed so that one scale indicates weight in the metric system, and the other in the British, the sliding poise being so arranged that it can only indicate in one system at a time.

Some different forms of steelyards are illustrated in Fig. 27. In Fig. 27 (1) the sliding poise hangs freely at p from the notch at which it rests.* It may be used for lighter or heavy articles; in the diagram it is arranged for use with lighter loads. F is the fulcrum, and the shackle hangs from the knife-edge A, through which the load acts. The moment of the weight in that position is represented by the product of the weight with the distance af. If Ax does not rest in its bed the point A will be tilted and the distance af diminished, thereby causing the articles to weigh too light. To prevent this the projecting part below is constructed so as to prevent the shackle being put in position unless the piece Ax is down fully on its bed. For heavier loads this piece is turned over till the knife-edge A′ comes under a'. The moment of a weight at A′ round F will be less than that of the same weight at A in the ratio of $a'f'$ to af. Therefore, when a weight is so transferred from A to A′ the poise P must be moved towards F so that the distance Fp is reduced in the same ratio. If af be, say 4 times $a'f'$, then when weights are placed in pan with shackle at A′, the respective positions of p will be only one quarter the distance from F. Two scales will therefore be required, one for weighings at A and the other for those at A′. If in the case supposed the whole length of the scale for lighter weights be graduated from 0 to say 50 lbs., the scale for heavier weights will run from 0 to 200 lbs. The under projection nearer the fulcrum is for the same purpose as the outer one, to ensure that the piece xA (known as a tumbler) is firmly down on its bed.

Fig. 27 (2) shows another arrangement in which the poise P always acts at x, the knife-edge on the runner, from which it is freely suspended. The nib is easily removed from the notch by the handle shown. The load acts at the knife-edge A at a distance af from the fulcrum F. On the shorter arm is a small sliding poise p with a scale showing ounces. If each one inch graduation at y represents 1 lb., and the smaller scale is 5 inches long, then it will represent 1 lb., provided the weight of the smaller poise p is one-fifth of that of P; this follows from the principle explained in par. 102 above.

* This form was patented by G. W. Davis.

Moving P one inch towards fulcrum is balanced by moving p 5 inches towards fulcrum. The ratio of the scale on longer arm to that on the shorter is the same as that of the weight p to the weight P. If a weight of, say 1 lb., be added at A, the equilibrium of the steelyard will be preserved by moving p an equivalent distance towards the fulcrum, so as to decrease its moment by the requisite amount. It will be seen therefore that the scale on the shorter arm must be numbered, for weighing odd ounces, in the same direction as that on the longer arm, *i.e.* from left to right in the diagram.

Fig. 27 (3) shows another form of double-scaled steelyard. The projection between the knife-edges A and A′ is for the purpose of preventing the shackle from being shifted easily from one to the other. A is for lighter and A′ for heavier weighings. This diagram is shown graduated from 10 lbs. upwards. For this purpose the shorter arm is made lighter than if the scale was graduated from zero, so that a load of 10 lbs. at least is necessary to balance it at all. Now, if af be five times $a'f'$ then the scale for heavier loads will have a range five times that for light loads. Suppose the lighter scale is graduated from 10 lbs. upwards to 100, then 10 lbs. at A is balanced by the poise at lowest graduation. If the 10 lbs. be placed at A′ the poise must be moved five times as far out from F. On the other hand, if 50 lbs. be the load on A′ it will be equivalent to 10 at A (since $a'f'$ is one-fifth of af), and therefore balanced by the poise at lowest graduation. Therefore if one scale be graduated from 10 to 100 lbs., the other must be graduated from 50 to 500.

Fig. 27 (4) shows a steelyard comprising some of the features of the others above. The long arm is of L-shaped section, the runner is on the flange. The poise P is freely suspended from the runner on a knife-edge at x. This knife-edge is kept in the same plane as the knife-edges at A and F. The graduation notches are on the face of the top of the L section. The roller connected with the poise ball runner works on the upper face of the flange. There is therefore no pressure or injury to the graduation notches. The runner is moved by the handle which also frees the nib y. A small sliding poise p with its scale measures the sub-divisions of

weight indicated by a graduation of the longer arm. The shape of the section of the arm enables the poise to pass the load shackle to the zero of the scale, which is on the left-hand side of the fulcrum.

Fig. 27 (5) is the "globe" steelyard (Bartlett's patent). The poise P acts as in cases (2) and (4), but with the scale on the under side so that the notches are protected. The mode of action of the instrument as regards the two scales and knife-edges A and A′ for light and heavy loads has already been described in other cases above. The special feature here shown is the shackle. It is shown as in use for light weighings. The scale for these is on the lower side of the blade. When it is to be used for heavy weighings the suspended load is shifted from the lower loop of the shackle (above the arrow) to the right-hand loop. This change causes the shackle to turn over towards the right until the load bears on A′ and the shackle rises off A. The scale and notches on the under side correspond to the heavy weighings.

TESTING STEELYARDS.

104. From the foregoing description it will be seen that, with simple steelyards, to ensure accuracy, the following conditions must be fulfilled :—

(1) The instrument must balance by itself—that is, it must remain balanced with the sliding counterpoise at the zero of the scale. The only forces acting are those produced by the weights of parts of the instrument itself.

(2) The graduations on the scale corresponding to equal differences of weight must be equal ; this condition corresponds to the necessity for the equality of the arms in the case of a pair of scales, as explained in paragraph 67 above.

(3) The proper counterpoise, sliding and moveable, must be used.

In practice, the equality of the graduations on the scale of a common steelyard is more easily ascertained by actual experiment with standard weights than by measurement.

This is necessary in those trades in which the steelyard is mostly used for weighing quantities of certain well-known amounts, as those notches in the scale which are most used become most worn, and hence are apt to introduce error. The weight of the sliding counterpoise is a force which acts vertically downwards through its centre of gravity; if it be suspended this will come vertically under that point or notch on the arm from which it is suspended, and its action on the beam must be determined accordingly; but if it be not suspended, but slide on the beam, then it must be taken as acting on the beam in a vertical line through the centre of gravity of the poise.

105. In testing steelyards attached to weighing machines, care must be taken to see that the steelyard is horizontal when balanced. In steelyards attached to weighing machines the range of motion of the steelyard is small. In automatic machines (such as are described in par. 136, *post*, p. 90) the angle of deviation usually measures by a scale the weight on the platform of the machine. Such should be carefully tested for the extreme and intermediate loads. Unless carefully constructed, equal graduations on the scale do not correspond to equal differences of weight. Sometimes when a steelyard is suddenly much inclined, the knife-edges slightly shift their positions in the bearings, and so may cause an error. This "pumping," as it is called, should be carefully avoided when tests are being made. Details as to testing are given in Regs. No. 111–116, *post*.

PLATFORM MACHINES AND WEIGH-BRIDGES.

106. Another application of Beranger's principle (already illustrated by the French balance) is shown in Fig. 28. The sketch is given merely to illustrate the principle.

FBP and *fab* are two levers whose fulcra are at F and *f* respectively. The ratios of FA to FB, and of *fa* to *fb*, are equal. In practice the lever *fab* is double, and may be placed on both sides of BP, instead of beneath. The article weighed is placed on the platform, which rests on knife-edge bearings

at A and *a*, one on the upper and one on the lower lever. There is a free joint at B. The tension at P exercises a pull

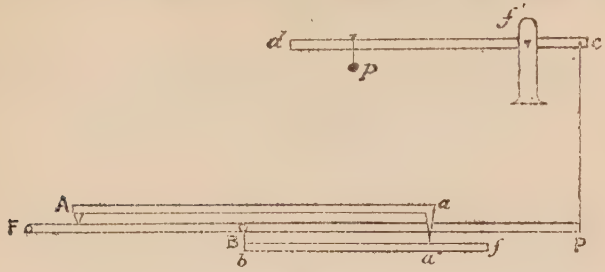

FIG. 28.

at *c*, the "goods" knife-edge of a steelyard, the fulcrum of which is *f'* and the poise *p*, which slides on the graduated arm *f'd*.

107. Suppose, for illustration, that a thing weighing 36 lbs. is placed somewhere on the platform. Now, a portion of the 36 lbs. will act at A, and the remainder at *a*. Suppose FB to be four times FA, and *fb* four times *fa*, then the pressure at A will be equivalent to one-fourth of itself at B; similarly, that part of the weight which acts at *a* will be equivalent to one-fourth of itself at *b*. Thus the instrument will work as if a weight equal to one-fourth that of the thing weighed were suspended at B. This result is quite independent of the position on the platform of the article weighed. This one-fourth, say, of the load at B will be equivalent to much less, say one-ninth, at P. By the steelyard *cd* the tension at *c* downwards is balanced by the sliding-poise *p*, and the load is represented by the distance *f'p* as read on the scale.

108. The principle described in the two preceding paragraphs is much used in the construction of weighing machines (see pars. 110 to 113, *post*). The term "weighing machine" was formerly used to denote fixed platform machines like those used in markets and railway stations. But now it must be taken to include any weighing instrument whatever (see 52 & 53 Vict. c. 21, s. 35, *post*, p. 228).

109. There are many devices for enabling the operator to estimate the weight of a very heavy body by means of comparatively small weights. Many weighing machines are apt to get out of order from the weather and the strain produced by the weighing machine itself. Some are so constructed that the machine is only brought into a working position at the time of use, in order to save the wear and tear of the parts. This relieving gear must also be tested (Reg. 122).

110. The earliest form of weighing machine or "weigh-bridge" was a platform whose supports rested on levers. In Fig. 29 BBBB represents the platform, the supports of which

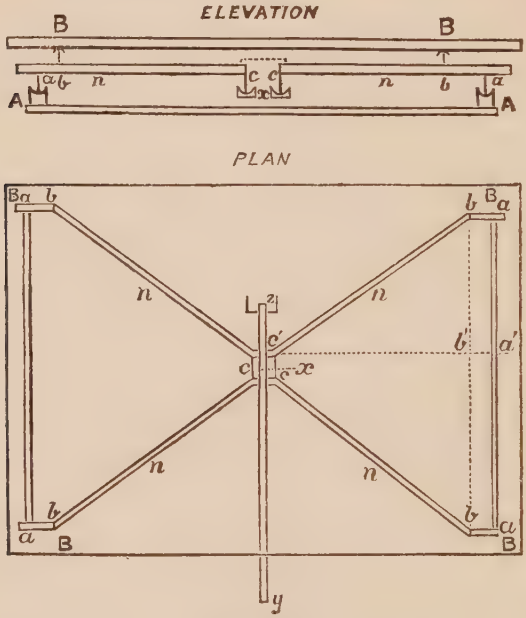

FIG. 29.*

rest on four levers *n*. In these levers the fulcra are formed of "knife-edges," resting on hardened bearings AA. In order to promote accuracy in working, these bearings AA are

* This sketch is taken from the Model Regulations, and accidentally copied the error of showing the upper and lower levers *nn* joined, instead of the right and left respectively.

generally suspended from fixed points which are not shown in the figure. Similar knife-edges at the points b support bearings attached to the platform. The other ends (marked c in the figure) of these levers have knife-edges which also rest on bearings x, which are attached to another lever zxy. The fulcrum of this last-mentioned lever is at one end z, and the other end y is suspended from a steelyard.

111. The forces in this case are the pressures produced by the weights, and are parallel, since they act vertically downwards. In order that the weigh-bridge weighs correctly, the levers n must be similar, that is, the ratios of the lengths of their "arms" (ab to ac in the elevation, or of $a'b'$ to $a'c'$ in the plan, see par. 31) must be the same. Suppose ac is 20 times ab in the elevation, and $a'c'$ is 20 times $a'b'$ in the plan, then, whatever pressure is produced at the points b, there will be a pressure equal to one-20th of that amount produced at x; that is, for every ton of the load on the platform there will be one cwt. pressing vertically downwards at x. This follows from the principles given in par. 30, *ante*. If on the lever zxy the arm zy be, say, 28 times zx, then the pressure at x will produce a pressure of one-28th its own amount at y; that is, every cwt. at x will produce a downward pressure of 4 lbs. at y. Thus the pressure at y will be, in such a case, one 560th that on the points b, and every ton on the platform produces a downward pressure of 4 lbs. at y. Since the levers on which the platform rests are similar, the fact that the pressure produced by the load on the platform is not equally distributed at the four points b does not affect the result. The weight of the load can, therefore, be ascertained by measuring the pressure produced at y. This is done by means of a steelyard to which the end y is attached by means of a suspending rod. The steelyard is so graduated that the sliding counterpoise stands at zero of the scale when the only pressure on the levers is the weight of the empty platform.

112. Steelyards are made in many forms. These cannot be fully illustrated in this book, but Fig. 30 is a rough sketch intended to illustrate the principles on which they work.

(The devices there shown are not put on one steelyard, they are here grouped together merely for the purpose of illustration. *See* Fig. 27 (2) and (4).) It is often found advisable to have variable weights which can be attached to the sliding counterpoise, as R in Fig. 30. In such cases the amounts of

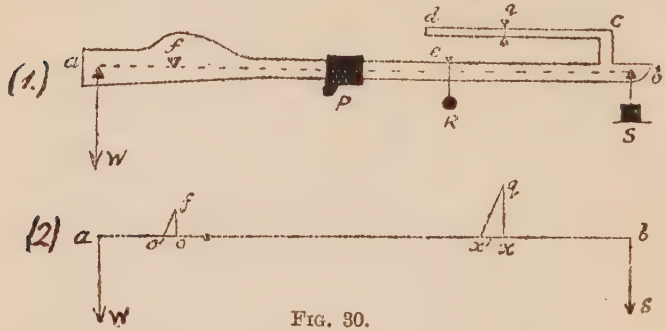

FIG. 30.

additional weights as measured by the *scale* will depend on the amount of weight with which the counterpoise is loaded. In other forms there is a supplemental arm, *cd* in Fig. 30 (1) (running back from the further end of the longer arm of the steelyard), which carries a second counterpoise. When the steelyard is horizontal the mechanical effect of this device is the same as if the second counterpoise were made to slide on the same arm as the first. Some counterpoises as P slide along the arm, others as R hang freely from the notches in the arm, and others as S hang freely from a knife-edge *b*. If the poise be a sliding one it acts through its centre of gravity vertically downwards on the steelyard; if it be suspended it acts on the arm vertically downwards through the knife-edge or notch from which it is suspended. In some forms there are two scales for one poise, one being graduated in the Imperial system, the other in the Metric.

If the steelyard be balanced when horizontal the leverage is independent of the height of the poise, say *q*, above the arm, as in Fig. 30 (2),* *ox* is independent of *qx*. But if the steelyard be inclined, the arm of the lever will be altered (*x'*

* In this figure the letters represent the same points respectively as in Fig. 30 (1).

then coming vertically under q, and o' under f) to $o'x'$ instead of ox. Hence, in cases of machines working automatically, where the steelyard moves through a considerable angle, it is essential that all the points where the poises act on the arm should be in one right line. If not, equal graduations on the scale will not denote equal differences of weight.

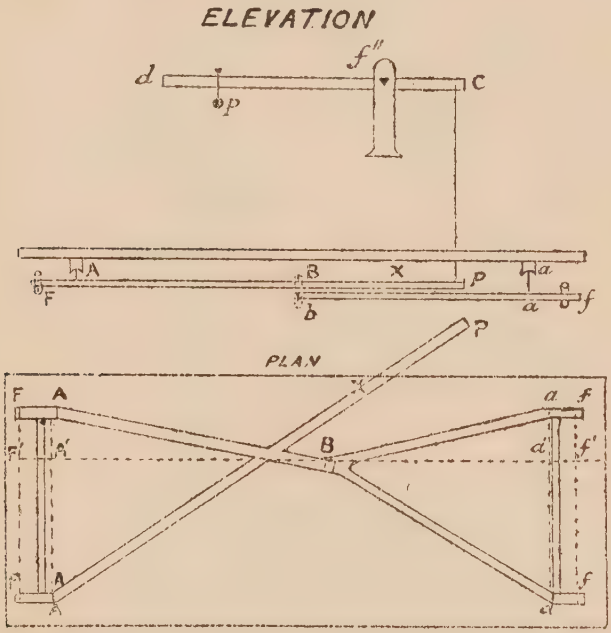

FIG. 31.

113. The form of weigh-bridge described in the preceding paragraph is not the most modern form, and is liable to error from various causes. The principle known as Beranger's principle can be also applied to weigh-bridges. Fig. 31 contains a rough sketch showing how that principle is applied. In this figure, as well as in the others in this book, the principle only is given. In practice, the levers are often curved so as to have the points of contact of the knife-edges and bearings in the same horizontal plane. As this principle

has already been fully illustrated (*ante*, pars. 106, 107), Fig. 31 has been lettered to correspond with Fig. 28, *ante*, p. 67. The platform rests with one end on one lever at AA, and the other end on the second lever at *aa*. These levers must be similar, that is, the ratios of their arms (FA to FB and *fa* to *fb* in the elevation, F'A' to F'B and *f'a'* to *f'*B in the plan)

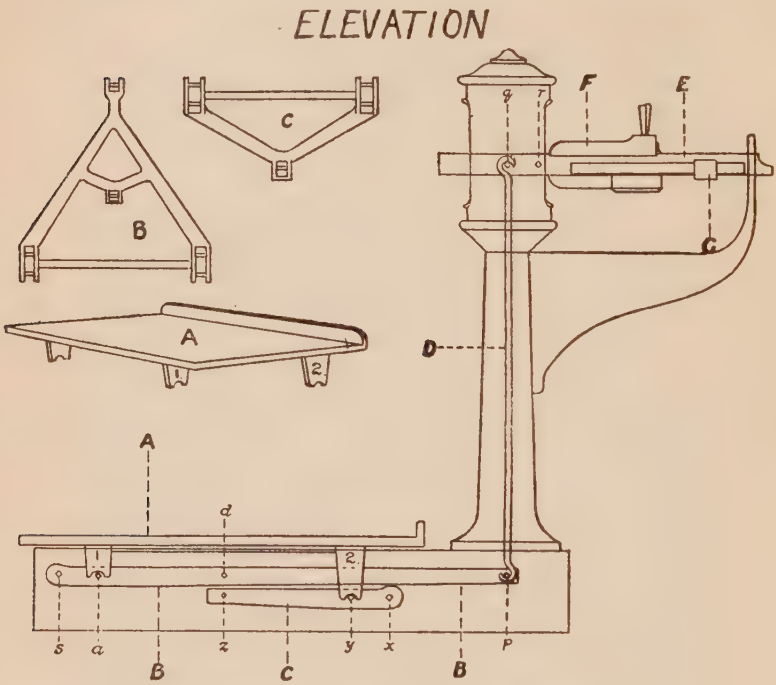

A Platform
B Long Lever
C Short Lever
D Connecting Rod
E Steelyard
F Sliding Counterpoise
G Small Sliding Counterpoise

FIG. 32.

must be the same. If this ratio be 20 to 1, then every ton on the platform will produce a pressure of 1 cwt. at B. The lever FBX, produced to a point P outside the machine, is used to reduce this pressure further, which can be then measured by means of the steelyard *cd*, the fulcrum of which is *f''*. At F and *f* are seen the swinging bearings—originally invented

by Pooley—which are links in whose lower ends the knife-edges rest, and which themselves hang from fixed supports; the object of the arrangement being to avoid lateral stresses on, or displacements of, the bearing surfaces.

114. The parts of a weigh-bridge and the mode of arranging them are shown in Fig. 32 in elevation, and Fig. 33 in plan, in which only the essential features of the parts are shown. In Fig. 32 the shapes of the platform and

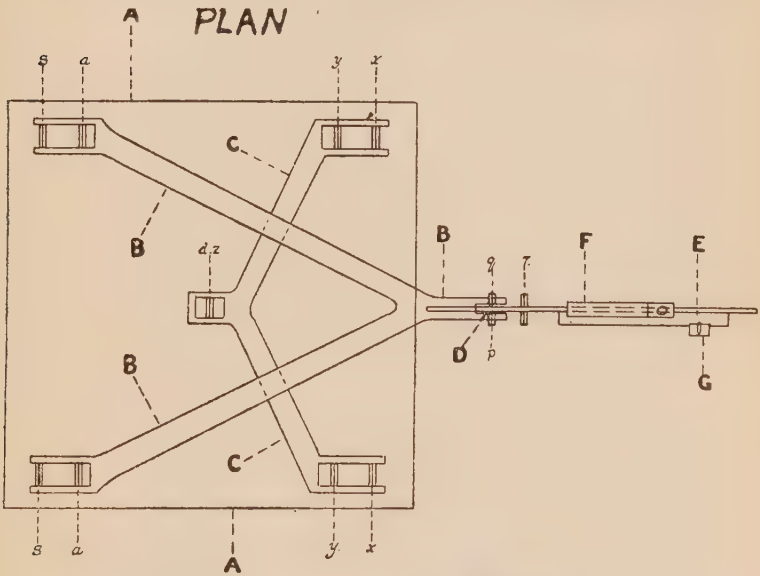

A Platform
B Long Lever
C Short Lever
D Connecting Rod
E Steelyard
F Sliding Counterpoise
G Small Sliding Counterpoise

FIG. 33.

parts under it are shown separately. A is the platform, of which two feet on the outer side marked (1) are shorter than the other two. The feet (1) rest on knife-edges *a* on the long lever B (called the "long body"), and the feet marked (2) on the knife-edges *y* of the short lever C (called the "short body"). The shape of the long body is shown separately in Fig. 32, its position will be seen by comparing Fig. 32 with

the plan, Fig. 33. One end rests on a fixed knife-edge at *s* (Fig. 32), and the other rests by a knife-edge on the lower end *p* of the connecting rod D, the upper end of which pulls on the knife-edge *q* on the steelyard E. The shape of the short body C is shown separately in Fig 32. One end rests on the knife-edges *x* (both diagrams), and the other is suspended by knife-edges at *z* from the long body at *d* by means of a link (not shown in the diagram). The mechanical action is the same as that explained in pars. 106, 107 above. The ratios *sa* to *ad*, and *xy* to *yz*, must be the same (taken as in pars. 111, 113, and Figs. 29 and 31), and the pull on the steelyard at *q* will be a certain definite proportion of the weight of the platform and its load. The fulcrum of the steelyard is the knife-edge *r*. Only the moving parts are shown, the pillar supporting the steelyard is shown in Fig. 32. F is a large poise for the heavier weighings, and G a smaller one for estimating smaller differences, each having its own scale; thus F may measure, say hundredweights and quarters, and G pounds. The mechanical action is the same as that previously explained with regard to Figs. 29 and 31.

115. In most machines there is a certain adjustment required before they are ready for use to compensate for wear and tear, or for the increase of weight of the platform itself owing to the accumulation of dirt, water, and the like. These usually consist of a ball or other piece travelling on a screw on one arm of the steelyard. These contrivances must be distinguished from those which are made for the purpose of facilitating the perpetration of fraud. As illustrations, the cases of *L. & N. W. Ry. Co.* v. *Richards*, *G. W. Ry. Co.* v. *Bailie*, and *Carr* v. *Stringer*, *post*, p. 154, may be referred to. The Board of Trade can specify in their Regulations what forms of adjusting devices may be used. In cases not covered by the Regulations the matter should be referred to them, and their decision will be final. (See sects. 5–7 of the Act of 1904, *post*, p. 240.)

116. The modern balance ball is shown in Figs. 34 to 36. This form is the more common. Another (shown in Fig. 39,

post, p. 88) is enclosed in the arm of the steelyard. A is the balance ball capable of travelling on B in either direction

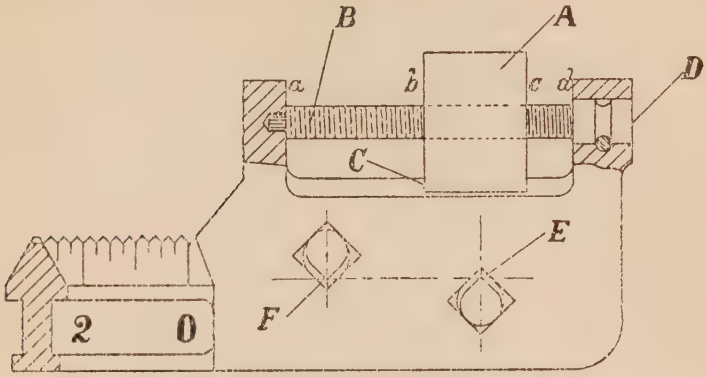

—Balance ball at extreme backward position.—

FIG. 34.

until it comes against the ends *a* or *d*. By being engaged at C it is prevented from turning when the screw B is turned by

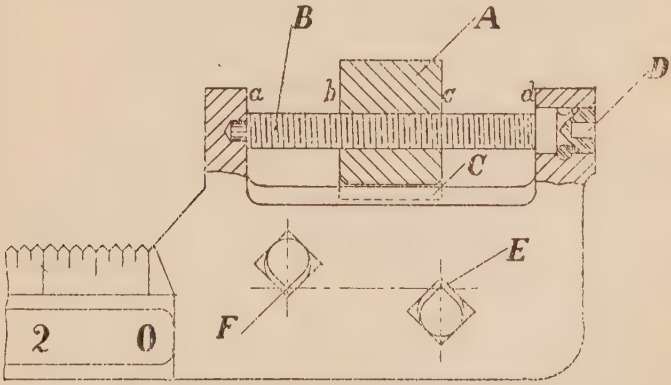

—Balance ball at intermediate position.—

FIG. 35.

the key at D. E is the knife-edge on which the connecting rod bears, and F is the fulcrum of the steelyard. The diagrams

show various positions of the ball. The balancing ball is here shown on the shorter arm of the steelyard; it may, however, be on the other. Wherever it is placed on the steelyard its action is the same. The increased weight of the platform is compensated by moving the balance ball in the direction from the shorter towards the longer arm of the steelyard. This is termed the "forward" direction. The effect of the arrangement is the same at whatever distance from the fulcrum it is placed, or when over it. It

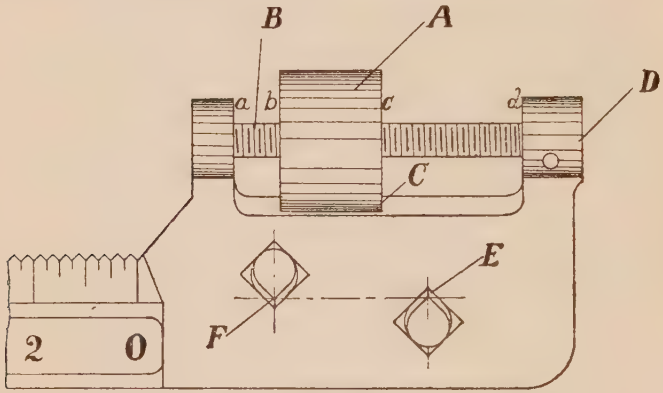

—*Balance ball at extreme forward position.*—

FIG. 36.

can be used to compensate for any defect, the effect of which is to produce a constant error, that is, one that causes the readings to be either too small or too large by the same amount in the case of every load. If the reading makes the load appear heavier than the true amount the ball should be screwed in the forward direction and *vice versâ*.

117. On the steelyard there are acting a number of parallel forces. Of these those acting downwards are the pull of the platform rod, the weight of the steelyard itself and the weights of the poises. The weight of a poise which is not suspended acts vertically through its centre of gravity, that of a suspended poise acts on the arm at the point of

suspension. The pull of the load on platform acts at the corresponding knife-edge. The resultant of these downward forces acts, when the arm is in equilibrium, at a point in the same vertical line as the fulcrum. This is the "centre of load" (*ante*, par. 44) on the steelyard. Whether this point is above or below the fulcrum depends on the positions of the points at which the several downward forces act, and their relative amounts. The nearer that point is to the fulcrum the more sensitive the steelyard will be. If it be above the fulcrum the instrument will be a vibrating one, and if below it will be an accelerating one. In an accelerating steelyard when the sliding poise is so moved as just to overcome the pull of the platform the arm will move down and keep down, in a vibrating machine it will oscillate before coming to rest. If there be only one sliding poise and no loose ones the case is comparatively simple, and the case is similar to that of a scale-beam.

118. If "centre of load" be at the fulcrum then the force tending to counteract that of a small excess weight on the platform would be the weight of the steelyard itself without the poises. As this is constant the machine would be equally sensitive at all loads. Such a machine could only be constructed with all the poises sliding, or if any are suspended from a pan at the end of the steelyard it should be suspended from a knife-edge that is in the same plane as the fulcrum. Such a condition, however, would be extremely hard to realize. The sensitiveness therefore (just as in the case of scale-beams, *ante*, pars. 41, 42) will vary with the load. Its nature depends on circumstances similar to those discussed in connection with beam scales.

119. The position of the knife-edges on the levers is of much importance. Referring to Fig. 32 it will be seen that on the long lever, B, besides its weight the forces pressing it down act on the knife-edges under the feet of the platform at *a* and on the knife-edge *d* from which the short lever C hangs. These knife-edges must be in the same level plane. It follows that the resultant of these downward forces acts at

some point in the same level plane. The upward forces (consisting of resistances at the fulcra, and the tension of the connecting rod) equilibrating the former forces act at the knife-edges at *s* and *p* respectively. These three knife-edges should be in the same level plane. The single resultant of these three upward forces acts at a point in the same plane. This point and that at which the downward resultant acts must be either coincident, or one vertically over the other. If the downward resultant acts at the higher of these two points the lever will act as if it accelerated and the lever will move quicker and the machine be more sensitive; if it acts the other way the machine will be slower in action. The wearing of the knife-edges will therefore tend to make the weigh-bridge slower, or more sluggish in action.

The same reasoning applies to the lower lever, C. In this respect the levers under the platform and the steelyard are all affected similarly by wearing of knife-edges. The sensitiveness of the whole weigh-bridge depends on the sum of the effects of the action of the levers and steelyard in this respect, therefore a quickness in one may compensate for slowness in another of these parts. For instance, when the lever knife-edges are worn the consequent slowness of the machine may be compensated by slightly raising that knife-edge on the steelyard which bears the connecting rod, and so quickening the action of the steelyard.

TESTING WEIGH-BRIDGES.

120. We have seen in par. 29 that when all the forces acting on a lever (or, which is the same, all the knife-edges and the centre of gravity of the lever) are *in one straight line, or the same plane,* the inclination of the lever does not affect the equilibrium. Otherwise, and it is most difficult to ensure all these being accurately in a straight line, the conditions of equilibrium will be changed if the lever is inclined. As in this class of machine the position of equilibrium is a fixed one for all loads, the inclination of each lever will be constant. A want of level in the steelyard itself will, for each of its counterpoises, produce a similar result—a change

of the zero position, and then a constant percentage of error for increases of load; but these will be different for each counterpoise, which slides on a separate bar or hangs from a separate pan (see par. 112). Errors arising from various causes are of two kinds, *viz.* those that are *constant*, that is, the same in amount for every load, and those that depend on, and are *proportional to the load.* Examples of the former kind are:—errors due to dirt, etc., on the platform, excess or deficiency of weight in the arm of the steelyard, or incorrect adjustment of the balance ball; examples of the latter class are:—errors in leverage of levers or steelyard, deficiency or excess in the weight of the poises. The former kind are more easily detected near the zero, or with a small load, and the latter near the maximum load.

121. The action of the mechanism underneath the platform consisting of the long and short levers or "bodies," with their fulcra and knife-edges, has been explained. The object of it is to secure that the result of weighing is independent of the position of the load on the platform. If the levers under the platform are out of level (the level of the platform itself does not matter, save in so far as it may show that the whole machine, and with it the levers, are out of level) this will change the position of equilibrium when there is no load, and then produce in addition a percentage of error for every increase of load. If the leverage be altered by any shifting of the bearings the result will be different when the standard weights are placed in different positions on the platform. Testing therefore must take place after the weigh-bridge has been fixed in the position in which it is to be used.* Defects in leverage will be made apparent by placing a large standard weight or load in different positions on the platform and comparing the indications on the steelyard. The mode of carrying out this test is prescribed in Regs. 121–3, *post*, p. 288. The existence of excessive friction at the bearings may be discovered by testing with a large

* The reader is referred to *Monthly Review*, vol. ix., p. 33, for a note by Mr. *Kenyon* on the subject of weighing carts with only two wheels at one time on the platform.

load on the platform, by using an additional standard weight. This is one reason for requiring that sensitiveness be tested at the maximum load.

122. The steelyard and its counterpoises should be next examined and tested (pars. 104, 105, 112). The scale should be first examined as to the accuracy with which it is constructed, that is, that the intervals of graduations for equal differences of weight are equal (*ante*, par. 104). A counterpoise will be accurate (the scale being properly graduated in the first instance) if it gives correct results for any two points on the scale. Each sliding counterpoise should be tested separately. The loose counterpoises can be tested by trying one on the steelyard with the corresponding weight on the platform, and then by weighing this one in a balance against the others in succession. The actual weights of the loose counterpoises should bear the same proportion to each other as those weights do which they respectively represent. This method, however, has its drawbacks. For it to be successful the errors of observation, or limits of error in the weights or balance used, must be less than the limits allowed on the weigh-bridge tested. Some makers construct their machines so that the loose poises are themselves of standard denominations, as, for instance, where a poise weighing 1 lb. equilibrates, and therefore represents, say, one hundredweight on the platform. This method is convenient for many purposes, but the poises in such cases should not be marked with their actual weights, for if they are they must comply with the regulations applicable to ordinary weights on which the limits of error allowed may be smaller.

123. A sliding poise may be incorrect from either or both of two causes. Its centre of gravity (through readjustment or repair) may be displaced from its original position, or its actual weight may be incorrect. The effect of the pull of the connecting rod on the steelyard is balanced by the moment of the weight of the poise (acting through its centre of gravity) round the fulcrum. For instance, if the centre of gravity be displaced outwards, say $\frac{1}{100}$ of an inch, the poise to balance must be $\frac{1}{100}$ of an inch nearer the fulcrum, and

will therefore show a wrong reading on the scale by the same amount. Or if the poise rest with its nib at the same graduation the variation will be seen on one of the smaller poises, as the large incorrect poise will exercise more than the apparent amount on the steelyard. If in such a case the capacity of the machine be, say 5 cwt., and the scale 20 inches, then the displacement of $\frac{1}{100}$ of an inch in the centre of gravity of the poise will produce an error of nearly $4\frac{1}{2}$ ounces. This error will be a constant one, the same for each load. It is precisely the same as if the position of the scale had shifted the like amount. It is most easily detected at the zero of the scale, or with the minimum load where the scale does not begin at zero. This, like all other constant errors, may be compensated for by the balance ball.

On the other hand, the poise may be too light or too heavy. If it be too light it must be moved further outwards to balance the load, which will then appear heavier than its true amount; if it be too heavy the apparent weight will be too light. These errors will be proportional to the load weighed. This error, like others proportional to the load, is best detected at or near the maximum load, and is compensated by altering the weight of the poise.

124. To illustrate by an example. If the poise in Fig. 37 be placed at the zero of the scale, and then an additional weight, say $\frac{1}{55}$ the weight of the poise, be placed over the centre of gravity of the poise, it will be found that all loads weighed will appear lighter than their true amounts in the ratio of 55 to 56, or 2 lbs. in the hundredweight. In such a case 448 pounds would apparently weigh 440. But if the small weight be placed at some other point on the poise it will introduce another error. In the illustration just given if the small weight be placed at A the weight will be apparently greater, and at C apparently less than at B. These discrepancies are due to the fact that the centre of gravity of the poise and added weight together is in a different position in each case. The amount of this error will depend on the amount of the little weight and the distance of its centre of gravity from that of the poise itself

In the experiment made for illustration the distance between the positions B and A was about 4 inches. So long as the additional little weight is kept securely attached to the poise

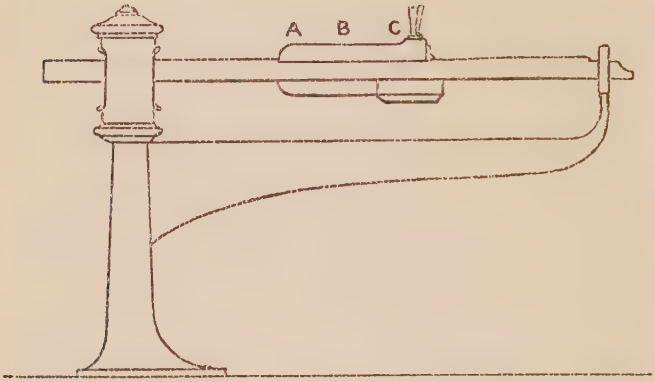

FIG. 37.

this additional error will be the same in amount for every load weighed.

Illustration:—An experiment was made on a 4 cwt. platform machine by placing a small weight at the points A, B, and C in Fig. 37 on the sliding poise, the position B being directly over the centre of gravity of the poise. The results were as follows:—

Weight on Platform in Pounds.	Observed readings in Pounds with Small Weight in different Positions.		
	A	B	C
448	442½	440	438¼

125. Before considering the theory of testing and adjusting the sliding poise of a weigh-bridge, it will be well to illustrate by means of an actual experiment the effects on actual weighings of the two sources of error, namely, the constant one arising when the centre of gravity of the poise has become displaced, and that due to the error in the weight of the poise itself. These effects are the same in machines which are graduated from zero, as in those that are graduated

from any given minimum weight. The amount and effect of each of these errors may be discovered by taking a series of weighings, and analyzing the results in tabular form. The calculations will be simplified by making the tests with a series of standard weights differing by the same amount.

Illustration :—An additional small weight was placed on the sliding poise of a 4 cwt. platform machine successively in three places A, B, and C on Fig. 37, and a series of weighings were taken. The steelyard was graduated to quarter-pounds, and its readings must be considered as the nearest quarter-pounds. The results are here given in pounds and decimals of a pound, as follows :—

True Weight on Platform.	Apparent Weight as indicated by Steelyard.		
	A	B	C
(*a*) 448	442·50	440	438·25
(*b*) 336	332·50	330·75	328·25
(*c*) 224	222·75	220·50	218·50
(*d*) 112	112·50	110·50	108·50

That part of the error due to the added weight is proportional to the load, and that part due to the displacement of the centre of gravity is the same in each case. By subtracting each line (except the first) from the one immediately above, this second or constant error is eliminated, and the resulting errors should be proportional to the differences of load (here 112 lbs.) in each of the three cases. This is apparent on subtraction—

Differences.	Readings on Steelyard.		
	A	B	C
(*a*−*b*) 112	110	109·25	110
(*b*−*c*) 112	109·75	110·25	109·75
(*c*−*d*) 112	110·25	110	110

The error here left is due to the excess weight of the poise alone, and should be the same throughout. The average therefore of all the numbers denoting the readings may be taken. This gives the average reading as 109·92. The readings could not be taken nearer than a quarter-pound, so the average may be taken practically at 110. Therefore the position B was very nearly over the centre of gravity of the poise.

If the only error were that of the extra weight of the poise the four original weighings would have been 440, 330, 220, and 110 pounds respectively in each of the series of weighings A, B,

and C. But the errors due to displacement of the centre o gravity of the poise will be different in each of the series A, B, and C. By taking the differences between the observed readings and the weights (allowing for former error) 440, 330, 220, and 110 respectively, the differences in the respective cases are as follows :—

Weights on Platform.	Errors due to displacement of Centre of Gravity.		
	A	B	C
448	+ 2·50	0	− 1·75
336	+ 2·50	+ ·75	− 1·75
224	+ 2·75	+ ·50	− 1·50
112	+ 2·50	+ ·50	− 1·50

Each of the vertical columns A, B, and C show a constant amount within the limits of error of observation (nearest ¼ lb.). In the case A as the error shows an apparent increase, the poise was further from the fulcrum than its true position, therefore its centre of gravity was displaced inwards, *i.e.* weight was added at the end nearest the fulcrum. This error averaged 2·56 lbs. The scale of the steelyard measured 13 ins. for 4 cwt., therefore 2·56 lbs. represented a displacement of the centre of gravity of the whole poise of ·074 of an inch.

126. On examining the readings in the column marked A in the illustration given in the preceding paragraph it will be noticed that the first three (*a*, *b*, and *c*) are each greater than the true weight, but the fourth (*d*) is less. There will therefore be an intermediate point at which the reading will appear correct, although the machine may be unjust to a considerable degree. This is due to the fact that at that particular reading the error due to the want of accuracy in the weight of the poise will be neutralized by the constant error due to shifting of the centre of gravity of the poise, or to wrong adjustment of the balance ball. Therefore, if a machine appear correct for one weighing it may still be quite unjust. Two weighings at least are necessary in every case to test the machine.

Illustration :—A machine may indicate correctly the weight of 2 cwt., but may show a deficiency of 1 lb. on 3 cwt., and an excess of 1 lb. on 1 cwt. If the observations be correctly made, any two of them will suffice to disclose the nature and amount of the errors. Thus, by subtracting the loads and corresponding readings, we have—

Differences of Load.	Differences of Reading.	Proportional Error.	Constant Error.
3 cwt. − 2 cwt. = 1 cwt. 3 cwt. − 1 cwt. = 2 cwt. 2 cwt. − 1 cwt. = 1 cwt.	335 − 224 = 111 335 − 113 = 222 224 − 113 = 111	1 lb. per cwt. in each case.	2 lbs. in each case.

If the observations be accurately made, any two will give the required information. From this it appears that in examining for errors an apparently correct weighing must be treated exactly like one that is incorrect.

As the errors can be detected at any two weighings, the further apart these are the better, as the error is then more easily detected. In practice, therefore, the best plan for purposes of test and adjustment is to take one weighing at the zero of the scale and the other at the maximum load.

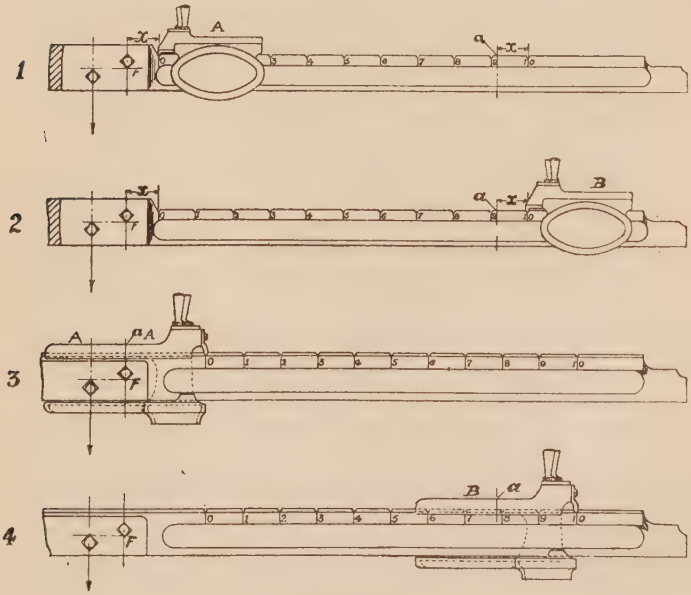

FIG. 38.

127. The machine must first be balanced by means of the balancing ball with the poise at the zero of the scale, Fig. 38 (1)

and (3). When this is done then the state of affairs is either—

(1) The machine is quite correct; or

(2) The poise is too heavy or too light, but the error is counterbalanced and concealed by the balance ball, which will not be in the same position as it would be in case (1); or

(3) The poise is too heavy or too light, but it is of such shape that its centre of gravity is in the same vertical plane as the fulcrum of the steelyard, which it will not affect, and there is no error in the balance ball. [This case is exceptional.]

Standard weights to the maximum amount are then to be weighed.

If the result is correct then the machine had a just poise and no constant error. If apparently light, the poise is too heavy; some metal must then be removed to make it too light, and the machine rebalanced at zero.

When the poise is too light, the apparent weight of the standards will be too large. The ratio of the weight of the light poise to its proper weight will then be apparent.

128. The amount required to be added to the poise can be accurately ascertained by experiment. In case (2) the weight of platform, etc., was balanced in part by a light poise. But the amount of error due to the lightness of the poise at zero position was counterbalanced by a constant error of the balance ball. The moment of this error round the fulcrum was that of the deficiency of weight of poise multiplied by the distance of its centre of gravity from the fulcrum. As the balance ball is not altered this error is also counterbalanced when the poise is at the point on the scale which corresponds with the load on the platform. The balance ball is nearer the fulcrum than it would be if the poise had been correct at the beginning. The metal to be added, therefore, must not be added at the centre of gravity of the poise, but on the scale at a point as much nearer the fulcrum as the fulcrum was from the centre of gravity of the poise at the

zero position. It is more accurate and convenient to measure this distance in both cases from the nib of the poise. Therefore, to ascertain the amount to be added, the following directions must be followed :—

Place the poise to indicate the true weight (say 10 cwt., as shown in Fig. 38 (2)). Measure from the nib towards the fulcrum a distance equal to that of the zero graduation from the fulcrum. (This is marked x in Fig. 38 (1) and (2).) Add lead at that point (marked a in Fig. 38 (1) and (2)) till the steelyard balances. The amount of lead required is the deficiency in the poise.

After the correct amount has been thus ascertained it is not necessary actually to add the lead to the poise at its centre of gravity. It may be securely fixed in the place for that purpose, and the machine rebalanced at zero or minimum graduation. In any case, it would have to be rebalanced to eliminate the error at first concealed, and the theoretical error introduced by not adding the lead at the centre of gravity will be corrected by the balance ball on rebalancing.

129. In many machines the poise is of such size and shape that when at the zero position it extends past the fulcrum, as shown in Fig. 38 (3). In such the process is very simple, as the point over the fulcrum can be marked (as a in Fig. 38 (3)), and the lead added there (*i.e.* at a in Fig. 38 (4)) after the poise has been moved to its position indicating the load. In the third case (in which the centre of gravity of the poise is at F in zero position) the same procedure is necessary, the only difference being that the second adjustment after the lead is added will be much less than in the case just described.

130. In machines graduated from a minimum load instead of from zero, the machine must first be balanced with the minimum load of standard weights on the platform. The test is then carried out in the same manner and the same reasoning applies.

131. In the practical testing of machines, as above directed, the operations mechanically performed are equivalent

to those described in pars. 125, 126 above. The zero position corresponds to one in which the reading is apparently correct, but really contains two errors equal in amount and opposite in effect; and taking the readings at the maximum load is in effect performing a subtraction as is done in the illustration given in par. 126 above. In machines graduated from a minimum load the connection between the calculating and practical methods is more apparent.

132. It will be necessary to test the balance ball as to its range. The Regulation at present in force (No. 118) allows a range not exceeding $\frac{1}{2}$ per cent. of the capacity of the

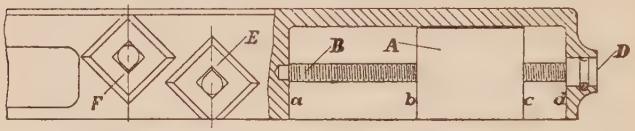

(1)-Balance ball at extreme backward position.-

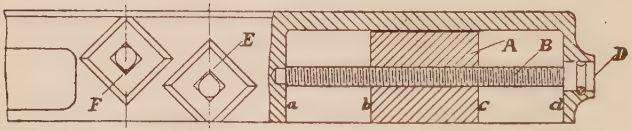

(2)-Balance ball at intermediate position.-

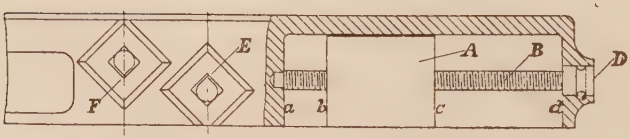

(3)-Balance ball at extreme forward position.—

FIG. 39.

machine, and not less than $\frac{1}{8}$ per cent. each way. Figs. 39 (1) and 34 (*ante*, p. 75) show the extreme backward position allowed for the balance ball when the machine is truly balanced with its

platform empty. Figs. 39 (3) and 36 (*ante*, p. 76) show the extreme forward position. It may rest in any intermediate position. In order to satisfy the present test on screwing A backwards so that *c* and *d* coincide the alteration in a weighing thereby produced *must* be at least $\frac{1}{8}$ per cent. of the capacity of the machine, say 56 lbs. on a 20-ton weigh-bridge. When A is screwed in the forward direction till *a* and *b* coincide the change so produced must also be at *least* $\frac{1}{8}$ per cent. of the capacity of the machine. But in either of these cases it *may be* as much as $\frac{3}{8}$ per cent. of the capacity of the machine so long as the sum of the two does not exceed a range of $\frac{1}{2}$ per cent. of the capacity, say 2 cwt. on a 20-ton weigh-bridge. (For testing, see Reg. 118, and note, *post*, p. 286.)

133. The total range of the balance ball depends on the sum of the distances *ab* and *cd* as well as on its actual weight. If the total range when tested exceeds $\frac{1}{2}$ per cent. then it can be brought within these limits by lightening the ball itself, instead of shortening the length of the travel *ad*. But such a lightening will require a compensating lightening of the other arm of the steelyard, or it will throw the zero position outwards from the fulcrum that is in the backward direction.

Should the zero position of the ball be outside the prescribed limits, that is, when either *ab* or *cd* (Fig. 39) represents less than $\frac{1}{8}$ of the capacity of the machine, it can be brought within the limits by adding a small amount to one arm of the steelyard, if the zero is to be moved forwards this must be added to the shorter arm, if backwards to the longer.

The balance ball may therefore be adjusted to compensate for any errors that are of a constant nature.*

134. Another source of error must be noted. It is the magnetization of the steelyard. This error in some cases is of

* For further information as to inspection and testing, the reader may refer to Mr. Hildreth's paper on large weighing machines in the *Monthly Review* (vol. i. p. 180), to Mr. Crabtree's in vol. iii. p. 92, and to Mr. Denison's (vol. xii. p. 210), and to Mr. Cliffe's paper on smaller instruments in vol. ii. p. 253. An interesting paper on "Our Scales for Weighing," by Mr. Granger, will be found reprinted in vol. xi. p. 205.

considerable amount. After a time the iron portions of a weigh-bridge become more or less magnetized under the action of the earth's magnetism. If the steelyard be of iron and lie north and south the effect will be greater than in any other position. There will be attraction between it and its stop if the latter be of iron, or in an iron pillar. Whatever the amount of this attraction may be, it becomes much increased as soon as the iron of the steelyard comes in contact with the iron of the stop. This increased effect may be obviated by preventing the iron from actually touching iron, by facing the stop, or end of the steelyard, with brass or wood or the like. The magnetization of the iron can be detected by placing a small compass needle on the steelyard near its end, and observing the rate at which the needle vibrates, compared with its rate of vibration when placed at a distance from any iron object.

135. Besides these weigh-bridges there are many forms of weighing machines depending on a combination of levers and some form of steelyard or balance. For instance, in *Denison's* crane weighing machine, by use of several short levers the whole machine is made so compact that it can be interposed between the nook of a crane and its load. Again, in the *Dayton Co.'s* "Money Weight" scales a supplementary steelyard is used; the pull of the goods pan (proportional to the weight) acts on the steelyard at a point whose distance from the fulcrum represents the *price per pound;* hence the scale on which the sliding-poise moves represents the total price. These are adapted for such articles as fruit, meat, and especially bread. Both steelyards should be tested and stamped (Regs. 137, 138). There are also various forms of small platform machines. These are of simpler form than weigh-bridges, but constructed on the same principles. They are liable to similar errors and may be tested in the same way.*

136. Instead of always bringing the instrument into equilibrium in a constant position by adding or moving the

* See Regs. 114–125; for crane machines see Regs. 126–132; for automatic, Regs. 133–136; and for price computing instruments, see Regs. 137, 138.

position of counterpoises, in another class of instrument the position of equilibrium is variable, and the change in position of the beam automatically increases or diminishes the counterpoise, and the amount of the load is indicated by the position of the beam. In Fig. 40 is shown the principle on which one of these machines—*Pooley's* self-indicating weighing machine—acts; *afb* is a steelyard whose fulcrum is at *f*, a cord *e* attached to an arc on the beam is fixed to a

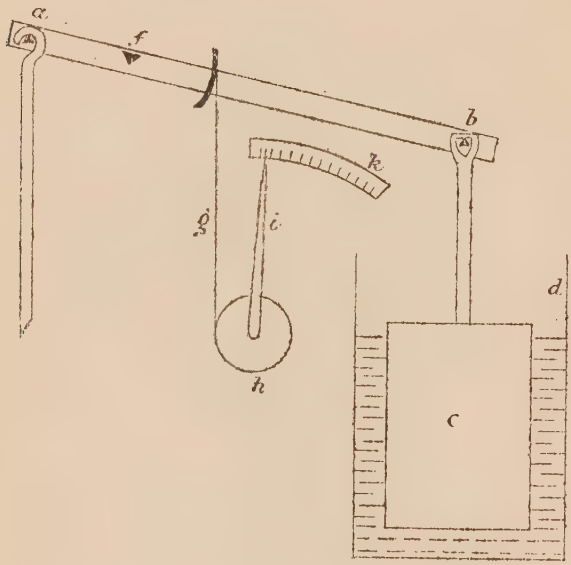

FIG. 40.

revolving drum *h*, which carries an indicator *i* working over a graduated scale *k*. Hence the position of *i* indicates the position of the beam *afb*. From *a* hangs a rod which is connected with the platform levers of a weigh-bridge in the ordinary way. From the other end *b* hangs a counterpoise *c* which dips into a tank of water *d*. The effective weight of the counterpoise *c* is equal to its weight diminished by the weight of the volume of water which it displaces (see *post*, par. 174). When a load is put on the weigh-bridge the end *a* is pulled down and the end *b* rises and lifts the counterpoise

out of the water, which diminishes the amount of water displaced and increases the effective weight of the counterpoise, until it balances the load. To regulate the movement the counterpoise is hollow, either the air or liquid passing through a comparatively small opening. As the counterpoise

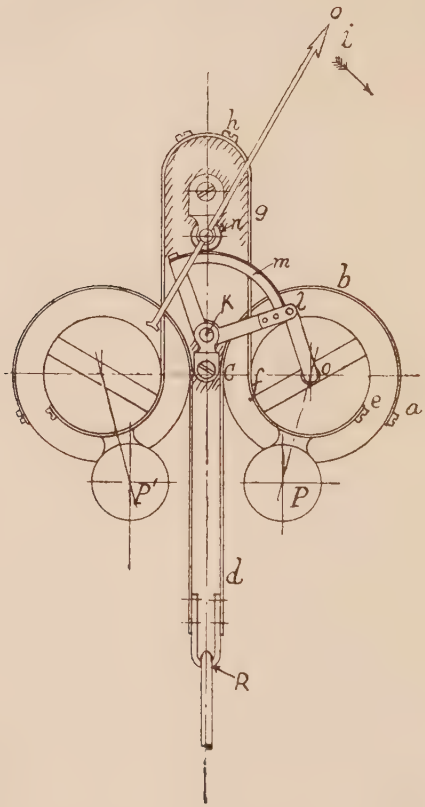

FIG. 41.

rises equal distances, its effective weight likewise increases by equal amounts, and hence would indicate equal increases of load *if every lever in the machine had its three knife-edges in a straight line.* This condition is necessary as the inclination of the levers is different for different loads. Since, however, it is not easy to secure that the knife-edges shall always be

in the same straight line, in testing such a machine it is necessary to test it, not merely for the smallest and largest load, but at numerous intermediate positions. There may also be an ordinary sliding-tare counterpoise. It also should

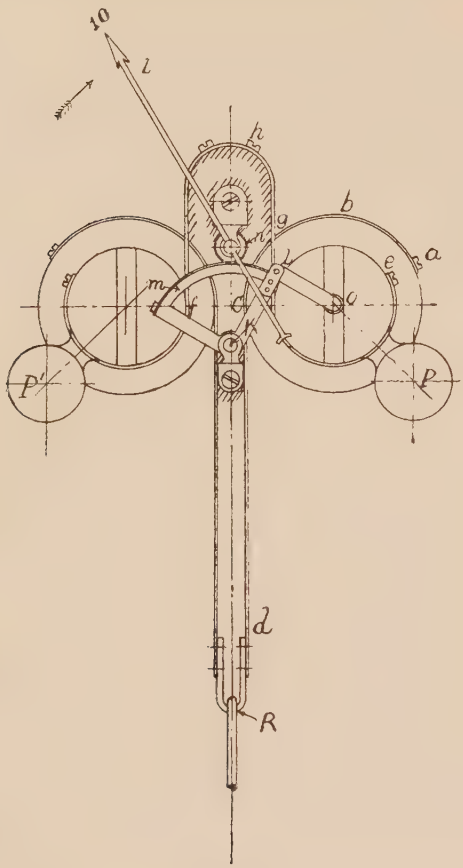

FIG. 42.

be tested separately, not merely when there is no load on the weigh-bridge, but when there is a load, for, as the inclination of the beam changes, the effect of the tare counterpoise would change if its point of application were not in a straight line with the knife-edges. Another point to be noted is that

there should be the proper amount of water in the tank. This may be tested by seeing that when the platform is unloaded the indicator-finger points to zero. Any change in the amount of water would produce an error in the indications of the machine. Evaporation would cause this in course of time, and make the machine indicate a less weight than it ought to do. In another machine of this class (*Denison's*) the counterpoise is partially immersed in mercury instead of water, it is rigidly attached to the steelyard, and the pressure of the mercury is an upward force acting vertically upwards through the centre of pressure of the displaced liquid.

138. Another machine of this type is that known as the "Aerostat" (the invention of a Mr. Stickig). Its characteristic parts are illustrated by Figs. 41 and 42. The load is placed on a platform, with the usual levers and connecting rod (not shown). Its counterpoises consist of two revolving drums, which are joined to the connecting rod by strips *a*, *b*, *c*, *d*. The strips are fastened at *a*, lie close round the circumference *abc*, then stretch vertically downwards to the connecting rod R to which they are attached at *d*. Second bands are attached to the smaller diameter at *e*, are wrapped round it, and then pass vertically upwards *fg*, and are finally fastened to the central pillar at *h*. The load causes a pull on the connecting rod at R. The bands *bcd* are pulled down and cause the drums to turn and roll upwards on the bands *efgh*. Counterpoise weights P and P′ are fastened to the drums and afford an additional counterpoise. They act as the bob shown in Fig. 7, *ante*, par. 31. To the centre *o* of the right-hand drum is attached a rod *ol* freely jointed at *o* and *l*, and a quadrant *lm* turning on its centre *r* actuated by the rod *ol*. When the drum rises the quadrant turns the spindle *n* of the index *i*, which moves as indicated by the arrow. There is a circular dial (omitted from the diagrams), and a comparatively small movement of the drum causes the index to move a complete revolution. The right-hand diagram shows the position after the load has acted on the connecting rod.

139. The other numerous automatic machines now in use are, so far as their essential features are concerned, constructed on the same principles as other platform machines. The index, however, is moved by a coin-actuating mechanism, so that the weight is not indicated until a coin has been inserted in the slot. It is not at all clear, however, that such automatic machines of this class as usually stand on railway platforms come within the provisions of the Acts, as no goods are bought, sold, or checked by them. They are only used for gratifying the curiosity of people as to their own weight. But if a similar machine be used for checking luggage it must be inspected, and, if incorrect as to its indicating dial, must be condemned as unjust. (See the case of *Great Western Railway Company* v. *Bailie*, noted on p. 155, *post.*)

140. Spring balances, and machines in which the weight is estimated by means of measuring the effect of a certain weight on the elasticity of a spring, depend on a principle different from those described above. In this kind of instrument the weight of a body is tested by seeing if it produces the same effect on the spring as a certain standard weight does. Thus, if a body stretches or compresses a spring to the same extent as a 1-lb. standard weight does, then the body weighs 1 lb., and so on. If the balance be loaded with an excessive weight, the spring, on removal of the weight, will not return to its original position; for this reason it is required that spring balances must be so constructed that they can, without being strained, bear a weight much greater than the maximum for which they are graduated and intended to be used. Machines of this class become incorrect whenever the elasticity of the spring, or the amount of friction developed in the working of the instrument, becomes altered. Their accuracy should be tested frequently with the working standards. It is important to see that all the parts can work freely. In some instruments the article to be weighed is suspended from a hook, in others it is placed on a pan; in testing the latter form of instrument the test-weight should be placed on various parts of the pan, and if the

instrument does not indicate the same weight for each position, it must be condemned as unjust.* (See the case of *R.* v. *Baxendale*, noted on pp. 156, 159, *post.*) The Regulations dealing with spring balances are Nos. 94–103, *post*, p. 279.

141. The foregoing portion of this book is intended to give a description of the principles upon which weighing instruments are constructed. No attempt has been made to describe the many forms of each class now in use, but when examined it will be found that the *principles of construction* are the same in all. In the discharge of his duties the inspector must be guided by the regulations of the Board of Trade, and by the bye-laws or other regulations of the County Council or other local authority of his district. The Board of Trade Regulations are given, *post*, p. 250. This book is intended for the assistance of the inspector in carrying out those regulations.

* The reader is referred to Mr. Davis' paper on "Spring Balances" in vol. xiii. of the *Monthly Review*, p. 389.

CHAPTER III.

PRESSURE OF GASES AND THE AIR, PARS. 142–145—BAROMETERS, PARS. 146, 147—TEMPERATURE, PAR. 148—ITS MEASUREMENT, PARS. 149–156—EXPANSION, PARS. 157–163—THERMOMETERS, PARS. 164–166—DENSITY AND SPECIFIC GRAVITY, PARS. 167–172—OF GASES, PAR. 173—MEASUREMENT OF SPECIFIC GRAVITY, PARS. 174–177—WEIGHT IN AIR, PAR. 178—ADHESION, PARS. 179–181—APPLICATION OF FOREGOING PRINCIPLES TO MEASUREMENTS, PARS. 182–190.

142. In order to discharge the duties of his office satisfactorily, especially with regard to the testing and estimating of measures, the inspector should have some knowledge of those principles which relate to the volumes of bodies and the capacities of vessels.

Pressure.

143. Air and all gases, if left to themselves, tend to expand as far as possible. If gas be confined in any receptacle, say a balloon, it exercises a certain amount of pressure against the containing vessel, which in this case is usually silk; on the other hand, the containing vessel may be considered to exercise the same amount of pressure on the gas. Pressure of this kind is usually estimated by its amount on a small portion of the surface of the containing vessel, since the pressure is uniform throughout. When steam is said to be under a pressure of 100 lbs. to the square inch, what is meant is that the steam presses against the vessel in which it is confined, so that each square inch of the containing surface is exposed to a pressure from the steam equivalent to what it would bear if it supported on that inch of surface a weight of 100 lbs. A piston in a cylinder in which steam was under a pressure of 100 lbs. to the square inch would be driven

forwards with a force equal to 100 lbs. multiplied by the number of square inches in the area of the end of the piston. To this must be added the weight of the steam itself, which is exerted vertically downwards on the under portion of the cylinder. The pressure which a liquid, air, gas, or steam exercises is perpendicular against every point of the vessel in which it is contained; but since air, gas, and steam are comparatively light, the extra pressure downwards produced by their weights may be neglected, and the pressure then is the same on each square inch of the surface of the containing vessel.

144. If there be a cubic foot of air, or gas, in a tube closed at one end and confined there by means of a piston fitting closely into the tube, a certain amount of pressure will be exercised against the tube and the end of the piston by the air or gas. Now, if this piston be drawn out so that the enclosed space be two cubic feet instead of one, then the pressure of the confined gas against the tube and piston will only be half what it was before. Similarly, if the piston be forced in till the original cubic foot is reduced to half a cubic foot the original pressure will be doubled, and so on. The volume occupied by the air or gas will vary inversely as the pressure; that is, the volume will be decreased to one-half, one-third, or one-fourth its original amount, by increasing the pressure twice, three times, or four times what it was at first. Throughout these operations, the gas is supposed to be neither hotter nor colder than it was at the commencement, otherwise the foregoing statement would not be true; the effect of heating the gas or air will be considered further on.

145. The atmosphere is subject to two different forces: that just referred to, by reason of which it tends to expand indefinitely; and the attraction of gravitation, mentioned in the first few paragraphs of this work. The joint effect of these forces is that the air presses on the earth and on all bodies on its surface with a force of about 14 lbs. to every square inch. This pressure is also called the weight of the atmosphere. When a pressure of two or three atmospheres is spoken of, 28 or 42 lbs. to the square inch is meant.

BAROMETERS.

146. If a tube closed at one end be filled completely with mercury and inverted with its mouth immersed in a vessel of mercury, it will be found that if the tube be held vertical the mercury will sink in it till its level in the tube is about 30 inches above that in the vessel. Now, if such a tube be a square inch in cross-section, the column of mercury in the tube will contain 30 cubic inches of the metal, and 30 cubic inches of mercury weigh about 14 lbs. The weight of the mercury in the tube is supported by the pressure of the air on the surface of the mercury in the vessel, hence the height at which the mercury stands measures the pressure of the atmosphere. This atmospheric pressure varies continually to a slight extent. In scientific investigations the standard atmospheric pressure is that of the metric system, and is taken to be that indicated by a column of mercury 760 millimetres, or 29·92 inches in height; in the Weights and Measures Acts the standard pressure is that of 30 inches. The instrument just described is called a *barometer.*

147. Another form of barometer is that known as the "aneroid." In this instrument no liquid is used, but the pressure of the air is measured by means of a circular metal box which is air-tight, and from which the air has been taken out. The changes in the pressure of the atmosphere produce a slight bending of the lid of the metal box, which moves an index. On the dial of the instrument are placed figures, indicating the corresponding height of the mercury barometer. A water barometer is one in which water is used instead of mercury. As a column of water 33 feet high on a base of one square inch weighs about 14 lbs., a water barometer will stand at about 33 feet, and its variations will be much larger than those of a mercury barometer.

TEMPERATURE.

148. Every body produces a certain sensation when touched, in addition to that of resistance. One says that ice feels "cold" and a fire "hot." When one body is hotter

than another it is said to be at a higher *temperature* than the colder one. But the sense of touch is not a certain test of the temperature of a body, as, for instance, if the hand be laid on the handle and blade of a dinner knife, the former will feel warmer than the latter, although both are of the same temperature (if the knife has lain untouched for some time), because the metal blade conducts the heat from the skin quicker than the handle does. This fact may also be illustrated by immersing the hands simultaneously, one in very hot and the other in very cold water, and then plunging both in a vessel containing lukewarm water, which will feel cold to one hand and warm to the other. This difference can only be due to the previous immersion, as the water in the third vessel must be of the same temperature throughout.

149. Temperature must be measured therefore by reference to some standard. It has been found that under the same conditions ice will always melt at the same temperature. The temperature of melting ice may, therefore, be taken as one standard, and is known as the "*freezing point of water*," or, more shortly, "*freezing point.*"

150. Again, it has been generally found that water will boil at the same temperature so long as the pressure of the air (*ante*, par. 145) remains the same. Besides depending on the pressure of the air, the temperature at which water begins to boil depends on the kind of vessel in which it is contained when the experiment is made, but this cause of variation of the temperature of boiling water does not affect that of the steam which is given off. Hence the temperature of the steam which is given off by boiling water (when the air in the room in which the experiment is made is at a certain pressure) is constant, and affords another standard for temperature. The standard temperature is that of the steam given off when the barometer, which indicates the pressure of the air,* stands at 760 millimetres (see *ante*, par. 146), or 29·92 inches. This temperature is termed the "*boiling point of water*," or, more shortly, the "*boiling point.*"

* According to the decision of the British Association Committee, the pressure is 29·905 inches.

151. When temperatures other than the standard ones have to be indicated, some scale must be used for the purpose. There are three methods of estimating temperatures in ordinary use: the Fahrenheit, Centigrade or Celsius, and Reaumur.

152. Fahrenheit's system is the oldest. In it the lower standard temperature is that of a mixture of snow and salt, which is much colder than "freezing point," and the higher standard temperature, that of the human body, which is called "blood heat." After certain changes these temperatures were indicated by 0 and 98 (written 0° F. and 98° F.) respectively. According to this scale, ice will melt at 32 degrees (32° F.) and water boil at 212 (212° F.), when the barometer indicates a pressure of 29·92 inches, or 760 millimetres of mercury. The range between the freezing and boiling points of water is therefore 212° F.—32° F., or 180° F. The Fahrenheit scale is now referred to these standard temperatures, 32° and 212°, instead of 0° and 98°, as formerly. This system is used for all meteorological and commercial purposes in this country, but for all scientific purposes, or for calculation, the Centigrade system is now universally used.

153. In the Centigrade system the standard temperatures are the freezing and boiling points of water. The zero of the scale is at the former point, while the latter is denoted by 100. Hence these 100 degrees correspond to 180° on the Fahrenheit scale, or, as it is usually written, 100° C. = 180° F. The boiling point of water is estimated with the barometer standing at 760 millimetres.

154. In calculating any temperature in the Centigrade scale from the corresponding one in the Fahrenheit, 32 must be first subtracted from the number indicating the temperature in the latter scale, the difference being the number of degrees of Fahrenheit the temperature is above freezing point. If this number be multiplied by 5 and divided by 9 (since 5° C. = 9° F.), the result denotes the corresponding temperature in the Centigrade scale.

155. On the other hand, in finding the temperature in the Fahrenheit scale from the corresponding one in the Centigrade, the process given in the last paragraph must be reversed. The number expressing Centigrade degrees (C.°) must be multiplied by 9 and divided by 5 to get the equivalent number of Fahrenheit degrees (F.°). But as the number so obtained represents in F.° the excess of temperature above freezing point, that is, above 32° F., 32 must be added to the result in order to obtain the reading on the Fahrenheit scale corresponding to the given temperature on the Centigrade.

156. In the Reaumur system, which is used in Germany, Holland, and in some other countries on the continent, the standard temperatures are the same as in the Centigrade, but the scale is divided into 80 degrees instead of 100. This system is not much used, but if it be necessary to calculate temperatures with respect to it, the process is the same as that given in the last paragraph, with this difference, that the number 4 is substituted for 5, since 100° C. = 80° R. = 180° F. Centigrade temperatures may be converted into Reaumur by multiplying by 4 and dividing by 5, and *vice versâ.*

EXPANSION.

157. As a general rule, all substances increase in size, or *expand*, on being heated; this increase is termed "*expansion.*" The expansion which consists in the increase of lengths, as with rods, is termed "*linear expansion,*" and that which consists in the increase of the volume of a body, or the contents of a vessel made of the substance heated, is termed "*cubical expansion.*" This general rule, however, has its exceptions; the best known and most important of these is the case of water, which on being heated from 0° C. to 4° C. *decreases* instead of increases in volume; but on its temperature being further raised it then follows the general rule and expands, as, for instance, 645 cubic inches of water at 4° C. will become nearly 674 when heated to 100° C. So, too, 883 cubic inches of mercury at 0° C. will become nearly 899 when heated to 100° C. These are examples of cubical expansion.

158. Solids expand similarly on being heated. A rod of cast iron which is 892 inches long in melting ice will become *very nearly* 893 in boiling water, and a similar rod measuring 893 inches in ice will expand to *just over* 894 on being heated to the temperature of boiling water. Expansion such as that here mentioned is linear expansion, although the rod increases also in diameter and circumference, each of these latter dimensions increasing in the same ratio as the length.

159. The increase in the *volume* of the rods in the last example is a case of cubical expansion. The amount of cubical expansion is three times that of the linear expansion of the same body under the same circumstances. For instance, a rod of silver, which is 51·4 inches in melting ice will increase *very nearly* one-tenth of an inch when immersed in boiling water; one $51\frac{1}{2}$ (or 51·5) inches long will under similar circumstances increase just a little over one-tenth of an inch. If a block of silver contain 171 cubic inches at freezing point, it will increase *very nearly* another cubic inch on being immersed in boiling water; or, if a vessel made of silver contain * 171 cubic inches when filled with melting ice, it will contain 172 cubic inches when filled with boiling water. Now, 1 in 171 is just three times 1 in 514, or one-tenth in 51·4.

160. The amount which a substance expands for each degree of temperature is termed the "*coefficient of linear expansion*" or "*coefficient of cubical expansion,*" as the case may be. The coefficient of cubical expansion is three times the coefficient of linear expansion. Usually the shorter term "*coefficient of expansion*" is used, when the rest of the sentence indicates which is meant.

161. Expansion does not affect the weight of bodies solid or gaseous; as the volumes are increased they become less

* For if the 171 cubic inches of space in the vessel had been filled with that amount of silver at the lower temperature, the whole mass being of one material will expand uniformly on being heated. At the boiling temperature one can remove the inside mass of silver which will then measure 172 cubic inches. Hence the capacity of the vessel will also have increased to 172 cubic inches.

dense by expansion. This liability of bodies to expansion must always be taken into consideration. In the Weights and Measures Acts the temperature of 62° F. is given as that at which the standards are to be compared. Different substances have different coefficients of expansion; therefore, if two rods of different metals be exactly equal in length at 62° F., they will not be exactly equal at any other temperature. For instance, the metre, according to the Act of 1878, is the length at 0° C. of the platinum iridium bar deposited with the Board of Trade, and this bar at that temperature measures 39·370113 inches, but if the same bar be measured at 62° F. it will be found to have increased ·0058, or 58 ten-thousandths of an inch. For like reason the temperature of the standards of capacity is defined by the Act.

162. In metal standard gauges of extreme accuracy the expansion caused by the warmth of the hand will be sufficient to prevent them fitting into receptacles accurately and closely made if the latter be comparatively cold.

163. All gases and air expand the same amount under the same conditions. The coefficient of expansion of a gas or air is ·003665, which is the same as saying that for each degree Centigrade a gas expands one-273rd part of its own volume, the pressure remaining constant. This coefficient of expansion, ·003665, is that calculated on the Centigrade scale. The volume of a gas when heated from freezing point to boiling point of water under constant pressure, increases in the ratio of 273 to 373, hence 273 cubic inches at 0° C. will become 373 at 100° C., if the pressure remain the same. In the Fahrenheit scale the coefficient of expansion of gases will be ·002036.

THERMOMETERS.

164. The coefficient of expansion of mercury is more than seven times as great as the coefficient of cubical expansion of glass, hence mercury will expand relatively to the glass vessel which contains it. This expansion is called "*relative expansion.*"

A mercurial *thermometer* is a closed vessel, consisting of a narrow tube with a bulb at one end, partially filled with mercury. The tube and bulb are so proportioned that the mercury stands near the lower end of the tube when the instrument is at the lowest temperature which it is constructed to indicate, and stands nearly at the upper end when the instrument is immersed in a liquid heated to the maximum temperature it is required to indicate. Thus, a thermometer to be used for indicating the temperature of the atmosphere will have a range from about 10° below zero on the Fahrenheit scale to about 120° on that scale. If such an instrument be immersed in boiling water it will burst, since the mercury would not have sufficient room in which to expand. The space between the top of the mercury and that of the tube must be quite free from air.

165. For measuring low temperatures, thermometers are made with alcohol instead of mercury. The advantage of alcohol is, that it will measure temperatures so low that the mercury in a mercurial thermometer would freeze when exposed to them.

166. For scientific purposes and delicate investigations air thermometers are used. The expansion of air is much greater than that of mercury, and, consequently, the errors due to the unequal expansion of the glass are much smaller than those of a mercurial thermometer. When air has had removed from it moisture and carbonic acid, it is found to give the same results whenever and however it may be obtained; hence thermometers which depend on the expansion of air give uniform results. Air thermometers are not used for ordinary purposes, hence need not be described in further detail in this work.

DENSITY—SPECIFIC GRAVITY.

167. As has been already explained (pars. 1–14), the quantity of matter or substance contained in any given volume is measured by its weight; also, if the temperature be raised, the volume will be increased; but, since no fresh

matter is added, the weight will remain the same. The same weight of a substance will not always occupy the same volume.

168. Again, the same volume, say a cubic foot of one substance, say mercury, will have a different weight from the same volume of another, as water. This is expressed by saying that the *densities* of these liquids are different. A liquid body which has a greater density than another is in ordinary language spoken of as being the "heavier" of the two. Iron is heavier than wood—in other words, a certain volume of iron, say a cubic inch, weighs more than the same volume of wood—that is, the *density* of iron is greater than that of wood.

169. The term "density," used in its strict sense, means the mass contained in unit volume of the substance. This involves the question of the standards used to measure both the mass and the volume. If the standard pound is taken as the unit of mass, and a cube whose side is the standard yard as the unit of volume, the density would be measured in "pounds per cubic yard." It is found much more convenient to compare the densities of bodies with a certain standard substance, and then the density of any body can easily be calculated. The standard used in scientific calculations is water at 4° C. The ratio of the density of a body to the density of water at 4° C. is called the *specific gravity* of the body. The specific gravity of mercury, for instance, is about 14: that is to say, its density is about fourteen times that of water at 4° C.

In the metric system* the unit of length for this purpose is the *centimetre*, and that of mass the *gram;* density is measured by the number of grams in each cubic centimetre, *i.e.* "grams per centimetre." As a cubic centimetre of water at 4° C. weighs very nearly one gram, the density of water is 1. The additional advantage of this is that in this system the specific gravity of any substance is equal to its density for all practical purposes.

* The passages in smaller type in this chapter, and other allusions to the metric system, will be better understood after Chap. IV. has been read.

170. As by pars. 11, 12 the quantity of matter in one body can be compared with that in another by weighing, so weighing affords a method of ascertaining the relative densities of two bodies. If two equal volumes of two substances be weighed, then the ratio of the weights found is that of the densities of the bodies. Thus, a cubic inch of silver will weigh ten and a half times as much as a cubic inch of water, hence the specific gravity of silver is $10\frac{1}{2}$.

171. The Board of Trade are empowered, under sect. 6 of the Act of 1889, to declare what shall be standards for estimating gravities. In scientific calculations, the standard of the metric system is adopted, which is that of water at 4° C.

172. The weight of a cubic foot of water when weighed in air at 4° C. is accurately 997·136 ounces. In 1797 and 1821 the weight of a cubic foot of water at 62° F. was estimated by Shuckburgh and Kater in England at 998·18 ounces (the legal weight); in Sweden in 1825 it was found to be 998 ounces; in Austria in 1830 it was calculated at 997·35 ounces, and in Russia in 1841 at 997·69 ounces.* For general purposes it may be taken roughly to be 1000 ounces.

In working in the metric system in France in 1795 a cubic decimetre was taken to be 1000 grams. Subsequent investigators from Shuckburgh and Kater onwards at times and occasions above stated have found the cubic decimetre of water to weigh as follows: 1000·480, 1000·296; 999·653 and 999·989 grams respectively.* A few years ago the late Prof. Mendeleef arrived at the result that 1 cubic decimetre of water at 4° C. weighed 999·847 grams. At 62° F. it weighed 998·71 grams. Further investigations are being made to a greater degree of accuracy.

The estimated weights here given were arrived at by weighing in air and water under suitable conditions carefully measured spheres or cylinders made of suitable substances, on the principles mentioned in pars. 174, 178 below.

173. It has been explained already how the volume of a gas varies inversely as the pressure to which it is subjected,

* The figures in this sentence are taken from Ency. Britt.

and also how the volume increases with the temperature. Now, if a gas be heated and not allowed to expand, the result of the increase of temperature will be an increase of pressure instead of an increase of volume. Again, since a gas expands from 0° C. $\frac{1}{273}$rd of its own volume for each degree, it follows that if the number of degrees be reckoned, not from 0° C. but from 273° below 0° C. as the zero of the scale, the number expressing the temperature will be proportional to the volume of the gas. Such a system is used in theoretical calculations, and the number of degrees is 273° more than the corresponding number on the Centigrade scale. Temperature so reckoned is called "*absolute temperature.*" The rule as to expansion of gases, given above in par. 163, is then simplified, the volume being proportional to the absolute temperature, and inversely as the pressure. This is usually written thus, $v = \frac{T}{p}$.

174. Archimedes (who lived from 287 to 212 B.C.) discovered the following principle, which is always known by his name: WHEN A SOLID BODY IS IMMERSED IN A LIQUID, IT IS PRESSED UPWARDS WITH A FORCE EQUAL TO THE WEIGHT OF THE LIQUID DISPLACED. In other words, the result of the pressure of any liquid on a body immersed in it will be an upward pressure equal to the weight of a volume of the liquid equal to that of the solid immersed. A cubic foot of water weighs, roughly, about 1000 ounces; hence a cubic foot of any substance will be pressed upwards with a force of 1000 ounces, or, what is the same thing, its weight in water will be 1000 ounces less than in air. The specific gravity of lead is 11·352, hence a cubic foot of lead will weigh 11,352 ounces; but if a cubic foot of lead be hung from a pair of scales so that it is immersed wholly in water, while the pans and weights remain in air, it will be found to weigh only 10,352 ounces, the loss of weight of the 1000 ounces being due to the upward pressure of the liquid above mentioned.

175. If the density of a solid be less than that of water, or if its specific gravity be less than 1, it will not sink, but

float partly immersed. The volume of the substance which is immersed will be equal to the volume of that amount of water which weighs as much as the whole of the floating substance. For instance, the specific gravity of ice is ·92; hence, if a lump of ice contains, say 100 cubic inches, it will sink until 92 cubic inches are immersed, and 8 only appear above the surface, since 92 cubic inches of water weigh as much as 100 of ice. From this property the specific gravity of any solid can easily be ascertained. The weight in water is first taken; next the solid is weighed in air. The difference of these two results represents the weight of a quantity of water equal in volume to the solid. On dividing the weight of the solid in air by the number representing that of the water displaced, the specific gravity is ascertained. Where solids are lighter than water, this method is modified by adding certain weights to sink the solid beneath the surface.*

176. Archimedes' principle is not only made use of for ascertaining the specific gravities of solids, but those of liquids as well. Since a body floats in a liquid more dense than itself, with so much of it immersed as displaces a quantity of water equal in weight to its own weight, the depth of immersion will measure the volume of liquid of a known weight. Thus, if a block of wood weighing 1000 ounces be floated on water, it will sink until a cubic foot of it is immersed, since a cubic foot of water weighs 1000 ounces. Now, if the same block be floated on another fluid, say mercury, it will sink until 127·11 cubic inches are beneath the surface, since 127·11 cubic inches of mercury weigh 1000 ounces. The specific gravity of mercury can be obtained by dividing 1728 (the cubic foot) by 127·11, which process gives the result as 13·59. Instruments constructed on this principle for testing the specific gravities of liquids are called *hydrometers.* They are generally constructed with a graduated scale on a slender stem, so proportioned that part of the stem alone projects over the surface. The proportion the stem should bear to the whole instrument depends on the average

* Full particulars and examples will be found in any text-book of elementary physics.

density of the liquids for which it is intended to be used. It may also be used for measuring graduated measures. See pars. 187, 188 below.

177. The specific gravity of a liquid may also be obtained by weighing a known volume of it, and dividing this weight by the number expressing the weight of an equal volume of water at the standard temperature. But this method is not used in practice in commerce as much as that described above.

178. This principle of Archimedes holds good also when the fluid is the air or a gas. The subject has already been referred to in paragraph 13. In ordinary transactions this slight source of error is not taken into account, but cannot be omitted when delicate investigations are made. The density or specific gravity, and hence the floating power of air, is increased with the increase of pressure (*ante*, par. 144), as indicated by the rise in the barometer; it also depends on the temperature (*ante*, par. 163); for these reasons, in determining standards of volume, the necessary weighings must be made at, or corrected for, a certain temperature and pressure. These are fixed for determining the standard gallon by sect. 15 of the Act of 1878 (*post*, p. 148). For the same reason the substance of the weights, brass, is also mentioned. If the weights were of some metal of different specific gravity, and therefore of different volume, the effect of the floating power of the air would not be the same. But the difference arising from using weights of a different material is so infinitesimally small, that it would not result in any appreciable difference in the volume of water weighed.

179. Measures for chemical and many other purposes, where small quantities must be accurately measured, are usually made of glass. Glass possesses the property of attracting water; moisture, when abundant in the air of a room, usually manifests itself on the window-panes. Now, if a clean rod or piece of glass be partly immersed in water, it will be observed that the water which comes in contact with

the glass will rise a little above the level of the rest of the surface. This attraction between two substances, of which that between glass and water is an instance, is termed *adhesion.* When water is contained in a comparatively narrow vessel, such as the lower part of a graduated glass for measuring medicines in, or a tube, the adhesion of the water to the side of the glass forms the surface into the shape of a saucer, the rim being that portion of the surface which is raised by being in contact with the glass. This depression on the surface of the water is termed a *meniscus.*

180. In ascertaining the level of water in a graduated measure so narrow as to form a *meniscus* at the surface of the water, the reading is taken from the under side of the *meniscus.* This may be done more easily by holding a sheet of white paper behind the vessel, and taking the reading where the under side of the *meniscus* appears somewhat dark. Great care must be taken that the eye is on the same level as the under side of the *meniscus,* and that the measure is held level. One device to ensure this is to have a mirror fixed in a truly vertical position, on the wall of the room (adjusted by a plumb-line). Then to hold the measure between the eye and the mirror and raise or lower it till the *under side* of the *meniscus* is seen on the same level as its reflection. Another way is to fix a piece of paper (half black and half white) on the wall of the room, so that the line dividing the black and white is horizontal and exactly the height of the observer's eye. The measure is then raised till the lower side of the *meniscus* is seen in a straight line with the junction of the black and white. The white half of the paper should be uppermost.

181. Mercury in this respect behaves in an opposite manner to water. Instead of forming a saucer-like depression in narrow vessels, the surface is higher in the centre than when it is in contact with the glass. In narrow tubes the shape of the surface of the mercury is like that of a saucer turned upside down, and is also termed a *meniscus.* These two shapes are distinguished by the terms "*concave*" and "*convex*" *meniscus;* the former is that which is formed when

the liquid in a glass vessel is water, the latter when it is mercury. In the case of such liquids as mercury the centre or top of the convex *meniscus* must be observed, and the eye kept on the level of this upper side.

182. The measure must be held perfectly level. To enable this to be done it is advisable to have the graduations marked all round the measure, and not on one side only. When used, the measure should be held at the same height as the observer's eye, so that the mark on the further side coincides with that on the side nearer the eye.

183. In some cases it may be found necessary or advisable to see the accurate level of the water or mercury in the glass vessel. In the case of water, this is attained by first cleaning the glass well, and then moistening the side of the vessel with absolute alcohol at that part where the surface of the water will come. This prevents the formation of a concave *meniscus.* A *very* slight smear of vaseline on the sides of the vessel beforehand will almost entirely prevent the formation of a *meniscus.* In the case of mercury, if a solution of chloride of mercury be poured in on top of the convex *meniscus*, it entirely disappears. The correct level can then be read off, as the chloride of mercury solution is transparent.

184. The foregoing methods are useful in order to calculate, in the case of tubes, the amount of allowance to be made for the *meniscus.* When this has been once ascertained each reading can be corrected to the true level.

185. When a tube is very small, the *adhesion* of water to the glass causes the water in the fine tube to rise much higher than the level of the water outside. In the case where a fine tube is immersed vertically in mercury, the liquid will not rise in the tube to the level of the mercury outside. This phenomenon in the case of fine tubes is known as *capillarity—a capillary* tube is a fine one, the word being derived from the Latin *capilla*, which means "a hair."

186. The best method of ascertaining the volume of a measure is by weighing the distilled water which it can contain. Since a gallon of water weighs 10 lbs., a pint will weigh 1 lb. 4 ozs. with the barometer at 30 inches and the thermometer at 62° F., and so on in proportion for any other aliquot part of the gallon.

187. The principle of the hydrometer (par. 176) may be applied to the testing of minor graduations on a liquid measure, or the deficiency of a measure incorrectly marked. If a measure be graduated, say, for pints, and filled with distilled water at 62° F. up to the level of any particular graduation, and then a body which does not absorb water, and weighs $1\frac{1}{4}$ lbs., be floated on the water, the level of the latter will rise to the next graduation, 20 fluid ounces having been displaced by the floating body. So a body (say a hollow brass ball) weighing one ounce when floated on water in a containing vessel will cause the level of the latter to rise to the same extent as the addition of an ounce of water. If the floating body be in the form of a hollow cylinder closed at one end, so weighted as to float vertically, a series of successive graduations may be read and tested by putting into the cylinder successive standard weights. Or the weights may be added outside so long as the body and weights do not sink to the bottom. A hydrometer might be used for this purpose.

To estimate the deficiency of a graduated measure, if short of the standard quantity, a plunger of any shape may be used, provided it does not absorb water, and does not sink to the bottom. It must be of the same weight as the weight of the volume of water allowed in deficiency. For instance, a comparatively bulky metal bowl, or cylindrical vessel weighing 2 ounces may be used for testing 1, 2, and 3-gallon graduations, or measures. If a half-pound weight be placed in the bowl it can then be used for 20 to 30 gallon measures. On the same principle small plungers can be made in other cases. The inspector need not note the depth to which the plunger sinks, it will be automatically correct.

188. Plungers for testing deficiencies in measures may also be constructed according to measured volumes instead of weight. The action of such can be understood by a reference

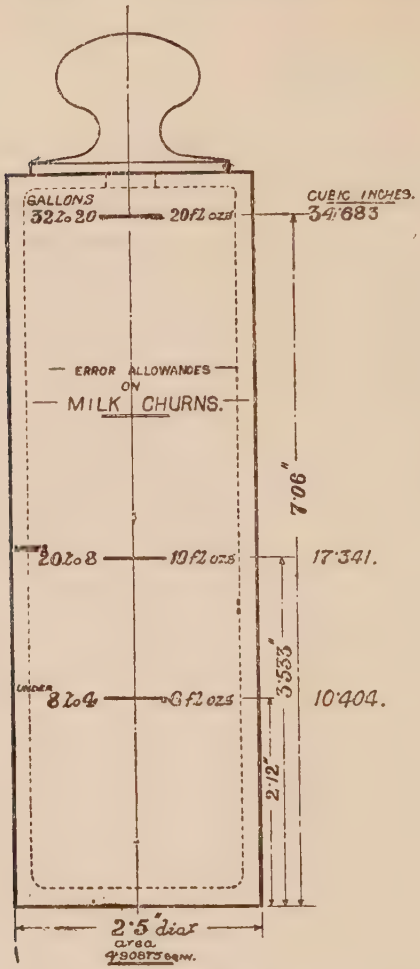

FIG. 43.

to Fig. 43. The plunger has marked on its circumference lines indicating the volumes corresponding to the errors allowed. The dimensions are shown in the diagram. If a

churn be tested, say, of 16 gallons capacity, the plunger is to be inserted by hand vertically until the 10-ounce graduation is level with the surface of the water, then the level of the water in the churn is observed to ascertain if it has reached its own graduation indicating the amount of water poured into the churn from the standard measure. In using these plungers where great accuracy is required care must be taken to hold the plunger vertically and at the exact depth required. In the case of a weight plunger, however, all the inspector has to do is to place it so that it floats freely on the water.

189. If the capacity of a measure be ascertained by weighing the water it can contain, and the weight be taken *in vacuo*, there will be a substantial difference owing to the floating power of the air. If the weighing be done in air at 72° F. instead of 69° F., and the barometer at 29 instead of 30 inches, each of these changes will lessen the floating power of the air, but the error so caused is so slight that it may be neglected—it amounts to less than one ten-thousandth of the volume measured. The amount of error, however, arising from the expansion of the water, if the gallon be estimated at 72° F. instead of 62° F., will be about ·43 of a cubic inch.

190. The cases in which standards have to be tested by weighing their contents, will be very few compared with those in which one measure will be tested by comparison with another. For this purpose, if the measures be small, mercury is the best liquid to use. The standard and measures to be tested should be allowed to remain in proximity for some time previously, in order that they may be at the same temperature. The standard should be carefully filled to the required amount, and then the liquid poured from one measure to the other. Care must be taken to avoid bringing the hand in contact with the mercury, lest its temperature be raised and expansion ensue. The mercury, after the experiment, should be again poured into the standard measure, in order to see if any appreciable expansion has taken place. If the measure to be tested be of the same size and shape as the standard, the readings may be taken at the top of the *meniscus;* but if

one vessel be a tube, and the other of some other shape, some chloride of mercury should be used also, as has been already explained in par. 183, *ante.* In cases where water or any other liquid which wets the measure is used, it must be remembered that on emptying out the fluid a small amount always remains adhering to the wall of the vessel. To compensate for this it is advisable to have all the vessels wetted and then well emptied out beforehand. In this way the fluid that is left behind when the one vessel is emptied is more or less accurately compensated by the fluid already adhering to the sides of that into which it is emptied. In testing measures the directions given in the Board of Trade regulations must be carefully followed.

NOTE.—The Board of Trade recommended (*Annual Report*, 1881) that in testing graduated glass measures each one-ounce graduation should be tested with a standard one-ounce pipette. The disadvantage of this is that any small error in accurately filling or reading the pipette, will be repeated each time it is used. In testing a 10-ounce measure the pipette would be used ten times, and hence, any slight error would be multiplied by 10. It would be better to use a standard graduated burette. Then if a slight error were made at one division, this would correct itself when running off the fluid to the next division, instead of all the errors being cumulative.

CHAPTER IV.

THE METRIC SYSTEM: ITS PRINCIPLE, PARS. 191–193—STANDARD OF LENGTH: THE METRE, PARS. 194–197—BRITISH EQUIVALENT FOR THE METRE, PAR. 198—SQUARE MEASURE AND ITS EQUIVALENTS, PARS. 199, 200—CUBIC MEASURE, PAR. 201—STANDARD OF WEIGHT: THE KILOGRAM, PAR. 202—METRIC WEIGHTS AND EQUIVALENTS, PAR. 203—MEASURES OF CAPACITY, PARS. 204, 205.

191. THE "metric" system is so called from the *metre*, which is the standard of length in that system; and from the metre all the other standards were, in the first instance, intended to be derived. It is sometimes called the "decimal" system, because the several denominations of weights and measures consist of either 10, 100, 1000, or 10,000 times the standards, or of $\frac{1}{10}$th, $\frac{1}{100}$th, to $\frac{1}{1000}$th, part of them. Hence there are no tables to be learnt in this system, and numbers expressing weights or measures are reduced from one denomination to another by simply altering the position of the decimal point. The names of the several denominations are derived from Greek or Latin words, which are so prefixed to the names of the standard that the value of any denomination may be known from its name alone.

192. Multiples of the standards are denoted by the Greek words or prefixes: *deka*, meaning 10; *hecto*, 100; *kilo*, 1000; and *myria*, 10,000. Hence there are—

> 10 *deka*-s in one *hecto-*; 10 *hecto*-s, or 100 *deka*-s in one *kilo-*; 10 *kilo*-s, or 100 *hecto*-s, or 1000 *deka*-s in one *myria-*; and 10 times the standard in one *deka*, 100 times it in one *hecto-*, 1000 times it in one *kilo-*, and 10,000 it in one *myria-*.

Examples:—(1) A *dekalitre* is a measure containing *ten litres*; a *hectare* an area or surface of *one hundred* ares; a *kilometre* a distance of *one thousand* metres; a *myriagram* a weight of *ten thousand* grams.

(2) Hence a *gram* is the *thousandth* part of a *kilogram*, the *hundredth* part of a *hectogram*, and the *tenth* part of a *dekagram*. So also a *dekalitre* is the *tenth* part of a *hectolitre*; a *hectometre* the *tenth* of a *kilometre*; and a *dekagram* the *hundredth* part of a *kilogram*.

(3) Since a *metre* is equal to 1·0936143 yards, a *kilometre* is a *thousand* times as great, that is equal to 1093·6143 yards. Taking one *litre* as equal to 1·76 pints, a *dekalitre* will be 17·6 pints (or 2·2 gals.), and a *hectolitre* 176 pints (or 22 gals.). The equivalent of a *gram* is 15·4323564 grains, consequently a *kilogram* is 15432·3564 grains, or 2·2046223 lbs., and a *myriagram* 22·046223 lbs.

193. Submultiples, or aliquot parts, descending by *tenths*, are denoted by prefixes derived from Latin words, and are in like manner prefixed to the names of the standards to denote the tenth, hundredth, or thousandth parts of them respectively. These prefixes are: *deci*, meaning one-tenth; *centi*, one hundredth; and *milli*, one-thousandth. Hence in all denominations of measures and weights there are—

> 10 *milli*-s in one *centi*-; 10 *centi*-s, or 100 *milli*-s, in one *deci*-; and 1000 *milli*-s, or 100 *centi*-s, or 10 *deci*-s, in each denomination of the standards.

Examples:—(1) A *centimetre* is the *hundredth* part of a *metre*; a *centiare* the *hundredth* part of an *are*; a *decilitre* the *hundredth* part of a *litre*; a *milligram* the *thousandth* part of a *gram*; a *millimetre* the *thousandth* part of a *metre*.

(2) Hence also 1000 *millimetres* are 1 *metre*; 100 *centimetres* are 1 *metre*; 10 *millimetres* are 1 *centimetre*; 100 *millimetres* are 10 *centimetres*, or 1 *decimetre*. So, too, 10 *decigrams* are 1 *gram*; 10 *centigrams* are 1 *decigram*; 100 *centigrams* are 1 *gram*, etc.

(3) A *metre* is equal to 39·370113 inches, therefore a *centimetre* will be ·39370113 of an inch. If a *gram* be taken as equal to 15·432 grains, then a *milligram* will be ·015432 of a *grain*. If a *decilitre* be taken as equal to ·176 of a pint, a *centilitre* will be ·0176 of a pint.

194. The METRE is the standard of length, and, as its name implies, the foundation of the metric system. Originally it was intended to be the length of *one ten-millionth* part of

the distance between the poles of the earth and its equator. At a subsequent period, when more accurate observations were made, it was discovered that the standard metre did not accurately represent such ten-millionth part. Hence the metre can now only be regarded as an arbitrary standard—namely, the length measured by a bar of an alloy of platinum and iridium, which is kept at Paris. There are two such bars. On one the metre is the distance between two fine lines marked thereon, called the "*mètre-â-traits*," or "line" standard, and on the other the metre is the length of the whole bar, as measured by the distance between its ends; the latter is the "*mètre-â-bouts*," or "end" standard. Owing to the expansion of the bars the metre must be measured when the bar is at a certain defined temperature; the temperature chosen for this purpose is that of melting ice—0° Centigrade. The "metre," having been thus ascertained, is an absolute measure; so when the bar expands, the distance between the lines or ends, as the case may be, is slightly more than a metre.

195. The metre being an arbitrary standard, some means must be taken to reconstruct it if destroyed. The only method of accomplishing this object is to measure very accurately some length which is constant in nature, and which is suitable to the purpose. It has been found that the most exact measure is that of wave-lengths of light. Light consists of extremely minute and short waves. Different coloured lights differ in the lengths of their waves, and ordinary white light is a mixture of the waves corresponding to the seven colours of the rainbow. The waves of light of any colour can now be calculated and indirectly measured with great exactness. It has been found, by Professor Michelsen of Paris, by measuring the waves of red light radiating from incandescent cadmium in air when the temperature is 15° Centigrade and the barometer stands at 760 millimetres, that the standard metre is equal to 1,553,163·5 of such waves.

196. The *metre* is used to express such lengths as would be denoted in the British system by feet or yards. Thus,

instead of saying that water was "105 feet deep," the equivalent phrase would be "32 metres;" a mountain 10,000 feet high would be spoken of as one of 3048 metres in height; 187 yards are about 171 metres. A *kilometre*, which is about five-eighths of a mile, is used for measuring long distances. In small measurements *centimetres* correspond to inches; one inch is about two and a half centimetres. Where measurements are very small, or where a length is liable to small variations, *millimetres* are in use. Thus, a barometer standing at "760 millimetres" is the same as at the height of 29·92 inches; and one at 30 inches would be in the metric system 762 millimetres. In the metric system 760 millimetres is the usual standard of barometric pressure; in the English it is 30 inches. In practice the other multiples and submultiples of the metre are rarely used. Thus, one speaks of "30 metres" instead of "3 dekametres;" 500 metres would be either so called, or "half a kilometre," but not "5 hectometres." Two denominations are never used together. Thus, 1020 metres are either so called, or "1·02 kilometres," but never "1 kilometre 20 metres."

197. Standard metres have been supplied to the Board of Trade by the International Committee of Weights and Measures at Paris. One of these is an "end" metre and the other a "line" metre. They are thus described—

The two metric standards are made of iridio-platinum, or an alloy of 90 per cent. of platinum and 10 per cent. of iridium. The metres are in transverse section, nearly of the form of the letter X, known as the Tresca form, and iridio-platinum, although a costly metal, was selected as being less affected by heat, practically non-oxidizable, and well adapted for receiving finely engraved lines. This alloy appears, indeed, to be of all substances the least likely to be affected by time or circumstance, and has been preferred for standard purposes to rock-crystal, gold, etc. The lines on the *mètre-â-traits* are fine, being barely visible to the naked eye. (*Extract from the Board of Trade Report*, 1895.)

The line standard has been verified to within one part in a million, and the end standard to nearly the same degree of accuracy.

198. To compare the British and metric standards of length, the comparison must be made with the standards at

their respective temperatures—the metric at 0° C. and the British at 62° F. The result of careful and elaborate experiments is that a *metre* is equal to 39·370113 *inches* or 1·0936143 *yards*. From this ratio all ratios of other denominations of length are calculated. For purposes of trade these ratios are promulgated by Order in Council, and are set out, *post*, pp. 203, 205. The following ratios will be found sufficiently exact for all rough calculations :—

5 inches	=	127 millimetres.
82 feet	=	25 metres.
35 yards	=	32 metres.
5 miles	=	8 kilometres.

199. From the *metre* as the standard of length the several denominations of SQUARE MEASURE for areas are derived. The area of a square the side of which is a metre is called a "square metre," and its symbol is m^2; thus—"$3m$" means "3 metres," "$3m^2$," is "3 square metres," etc. The unit of square measure is the ARE, which consists of 100 sq. metres, and is the area of a square the side of which is 10 metres. Hence the usual denominations of measures of area are: multiples of the *are*, *dekare* and *hectare*, consisting of 10 and 100 *ares* respectively or their respective equivalents 1000 and 10,000 square metres; and the submultiple the *centiare* or one-100th of an *are*, which is a square metre.

A *centaire*	is the area	of a	square of	1 sq. metre, the side of which is 1 metre.
A *deciare*	,,	,,	,,	10 sq. metres, the side of which is 3·1623 metres.
An *are*	,,	,,	,,	100 sq. metres, the side of which is 10 metres.
A *dekare*	,,	,,	,,	1000 sq. metres, the side of which is 31·623 metres.
A *hectare*	,,	,,	,,	10,000 sq. metres, the side of which is 100 metres.

200. The British equivalents, in square measure, are obtained by simply squaring the corresponding equivalents in linear measure. A metre is 3·280843 feet, or 1·093614 yards, hence the equivalents of the square metre or *centiare* will be the squares of these ratios, that is 10·76393 *sq. feet*, or

1·19599 *sq. yards.* The equivalents for use in trade are set out in the Order in Council (*post*, pp. 204, 205), but for ordinary purposes the following ratios in whole numbers will be found sufficiently accurate:—

200 sq. centimetres	=	31 sq. inches.
929 sq. decimetres	=	100 sq. feet.
29 centiares	=	34 sq. yards.
7 ares	=	27 sq. perches.
17 hectares	=	42 acres.

201. In CUBIC MEASURE, too, the denominations are derived from those of linear measure. The *metre* is again the foundation. The unit in this measure is the STERE, which is a cubic metre. Since a metre contains 100 centimetres, the area of the face of a cube the edge of which is a metre will be 10,000 *sq. centimetres*, and the cube will contain a million cubic centimetres, usually written 1,000,000 c.c.—"*c.c.*" being the abbreviation for "cubic centimetres." The face or side of this cubic metre or *stere* will be a *centiare*. Cubic measure is very little used, as it is entirely superseded by the measures of capacity (pars. 204, 205, below) in the case of liquids and grain sold by measure. The equivalents in British cubic measure are obtained by taking the cubes of the corresponding equivalents in linear measure. These are given, *post*, pp. 203, 204. For general purposes the following will do:—

3 cubic inches	=	49 cubic centimetres.
5 ,, ,,	=	82 ,, ,,
13 cubic metres or steres	=	17 cubic yards.

202. Theoretically, the unit of MASS is the GRAM, which was originally defined, and intended to be, the mass of a cubic centimetre of pure water at its greatest density, that is, at a temperature of 4° C. If this were exactly so, then the KILOGRAM of 1000 grams would be the mass of 1000 cubic centimetres, that is, a *cubic decimetre* of pure water at its maximum density. On this supposition the standard KILOGRAM was constructed. But at a subsequent period it was discovered that this standard was not quite accurately measured,

so the kilogram can only now be regarded as an arbitrary standard, the weight of which is very nearly equal to that of a cubic decimetre of water at its maximum density. A cubic decimetre of pure water at its maximum density has recently been found to weigh 999·847 *grams* (see *ante*, p. 107). The standard kilogram supplied to the Board of Trade is thus described.

The unit of mass, the kilogram, is determined by a piece of iridio-platinum in the form of a cylinder, the height and diameter of which equal 39 millimetres. The kilogram No. 18, supplied to Great Britain, has no engraved distinguishing mark, and is highly polished. On analysis it showed very faint traces of ruthenium, rhodium, and iron. Its volume was found to be at 0° Centigrade 18 = 56·14 millilitres, corresponding to a density of 21·5454.

After its final adjustment it was found to be, *in vacuo* at 0° Centigrade—

Prototype 18 = 1 kilogram + 0·070 + 0·002 milligram.

So that it may be said that the kilogram (kg.) has been verified with a probable accuracy of 0·002 parts in a million (*Extract from Board of Trade Report*, 1895).

203. The weights most in use are the *milligram* (about 0·015 of a grain), used for weighing small quantities, or where extreme accuracy is required; the *gram* (= 15·43 *grains*) and the *kilogram*, about 2·2 lbs. For large weights there are in use the *myriagram* (10,000 grams), of about 22 lbs., the *quintal* (or 100 kilograms), and the *tonne*, which consists of 1000 kilos. and is 0·984 of a British ton. The British and metric standards have been accurately compared, and it is found that a *kilogram* is equal to 2·2046223 *lbs.* or 15432·3564 *grains*. The equivalents of metric and British systems are given (*post*, pp. 204, 206), but for ordinary purposes the following ratios in whole numbers will be found sufficiently accurate:—

7	grams	=	108 grains.
39	,,	=	22 drams.
85	,,	=	3 ounces.
5	kilos.	=	11 lbs.
39	,,	=	86 ,,
127	,,	=	20 stones.
127	,,	=	10 qrs.
51	,,	=	1 cwt.
63	tonnes	=	62 tons

204. The standards of measures of CAPACITY were originally derived from the *metre.* One cubic decimetre, or 1000 c.c., was the original LITRE. But owing to the mechanical difficulty in constructing a standard cube measure, the inside edges of which are each exactly 10 centimetres, the standard was taken indirectly by weighing a certain quantity of water. As has been stated (*ante*, par. 202), the *gram* was intended to be the mass of 1 cubic centimetre of pure water at its greatest density 4° Centigrade, hence the mass of a cubic decimetre of water so taken should be 1 kilogram. The definition of the standard *litre* is therefore the *volume of one kilogram of distilled water taken at its maximum density.* It is found by experiment, when great accuracy has been observed, that the litre is 1000·16 cubic cms.; it is so given in the Order in Council regulating the metric standards to be used in the *United Kingdom* (*post*, p. 206). But for all ordinary purposes the litre may be taken as equal to a cubic decimetre.

205. It is not at all an easy matter to compute the ratio of the litre to the gallon. The gallon is 10 lbs. of water, weighed in air with brass weights, at a temperature of 62° F. and the barometer at 30 ins. First, there must be taken into account the increased weight of water occupying the same volume when the water is at its greatest density; secondly, there must be computed the corresponding weight *in vacuo* of this gallon of water; thirdly, the ratio of the volume of the gallon to the litre will be that of this reduced and computed weight of the gallon of water to the kilogram. The accuracy of the resulting ratio cannot be greater than that of the *pound* to the *kilogram*, which is experimentally determined; and the second stage of the computation cannot be accurately completed without knowing the amount of moisture in the air when the standard gallon was constructed, for the result will be affected by the floating power of the air. Therefore it is found best to compare the standard litre and gallon directly. This has been done, and the British equivalent of the *litre* is 1·7598 *pints;* and the metric equivalent of the *gallon* is 4·5459631 *litres.* For equivalents of other denominations, see the Order in Council, *post*, pp. 204, 205.

It will be found that for all purposes of commerce 50 LITRES = 11 GALLONS, the error being less than 1 in 8900. The standard for British use is a brass measure which contains a litre when its temperature is at 0° Centigrade (*post*, p. 203).

CHAPTER V.

BOARD OF TRADE, PARS. 206–216—LOCAL AUTHORITIES, PARS. 217–223—INSPECTORS, PARS. 224–246—SALE OF COAL, PARS. 247–251.

Powers and Duties of the Board of Trade.

206. As this work is intended mainly for the use of the inspectors appointed to carry out the provisions of the Acts, it will in this chapter only be necessary to allude generally to the duties of the Board of Trade; in the index detailed reference will be found.

207. The Board of Trade succeeded to all the powers and duties vested in or imposed upon the Treasury, Comptroller-General of the Exchequer, or the Warden of the Standards. They are empowered from time to time to conduct any comparisons or verifications of standards of measure or weight as may be expedient, to examine and certify patterns of weights, measures and weighing instruments, to settle differences as to their accuracy and efficiency, to regulate the work of the inspectors, and are to report to Parliament from time to time their proceedings under the Weights and Measures Acts. These reports are presented to Parliament usually in the month of August in each year.

208. The Board of Trade have the custody of the imperial standards of weights and measures, and also that of the parliamentary copies of those standards, which they are empowered to make under the provisions of the Act of 1878. Besides having the custody of these standards, the Board of Trade from time to time have to restore such of the imperial standards or parliamentary copies as may from time to time be defaced or destroyed. The parliamentary

copies of the imperial standards of measures and weights are to be compared once in every ten years with each other, and once in every twenty years with the imperial standards.

209. To this department also is assigned the duty of taking charge of and restoring when injured certain secondary standards of weights and measures, which are now known as Board of Trade standards. From time to time the Board of Trade are to make and duly verify new denominations of standards as may be required, which are Board of Trade standards in like manner as those in existence at the passing of the Act of 1878. These new standards have been included in this work with those enumerated in the second schedule to the Act (*post*, p. 198). Under the provisions of the Weights and Measures (Metric System) Act, 1897 (*post*, p. 239), standards of the metric system are placed on the same footing as British standards; such are enumerated (*post*, p. 202). The Board of Trade standards are to be compared with the parliamentary copies, and adjusted or renewed if requisite. The Board of Trade must from time to time, as required, compare, re-stamp, and verify the local standards submitted to them for that purpose by the local authority, including standards of the metric system.

210. Section 8 (*post*, p. 144) of the Act of 1878 provides that new standards be made by the Board of Trade "as appear to them to be required," but does not specify how the question of the necessity for such standards is to be ascertained. But under section 40 (*post*, p. 166) the local authorities are to provide such local standards "as they deem requisite," in order to verify "*all weights and measures in use*" in their respective localities. According to section 19 of the same Act, any weight or measure which is an imperial standard, "or some multiple or part thereof," is legal for trade. The members of any trade have a right to call on the local authorities to provide local standards to enable them to have weights and measures verified and stamped, so as to carry out their contracts within the limits so defined, and it is the duty of the local authorities to call on the Board

of Trade to make and verify the required new denominations of standards * (see notes to sections 8 and 24, *post*, pp. 145, 153).

211. Besides those standards already enumerated, they may from time to time make and verify new denominations of standards for the measurement of electricity, temperature, pressure, or gravities. They must also direct the verification of such working standards as may be provided by the local authorities. By section 5 of the Act of 1904 (*post*, p. 240) the duty is cast on the Board of Trade of making Regulations respecting verification, testing, stamping, etc., of all weights, measures, and weighing instruments, and for the guidance of the local authorities in the discharge of their duties. By such general regulations power may be conferred on local authorities to make special regulations as respects their areas in relation to inspection and other matters which having due regard to uniformity of administration can be best regulated by special regulations. The Board of Trade Regulations have been laid before Parliament and take effect from 1st October, 1907, as if enacted in the Act of 1904.

212. Until questions arise for the decision of the Courts in connection with the Board of Trade Regulations, it is not possible to define exactly their scope or force. It appears that these regulations are for the purpose of enabling the local authorities and inspectors to discharge their duties in a reasonable and proper manner, and hence should consist of detailed instructions for this purpose. The Board cannot by these regulations at all regulate the conduct or rights of the tradesman to have his instruments stamped when correct, provided they are not so constructed as to appear "likely to facilitate the perpetration of fraud," or are of a kind the pattern of which has been condemned by the Board of Trade.

* The practice pursued by some local authorities in prosecuting tradesmen for having weights unstamped (when there were no local standards whereby to test them), merely in order to force the tradesmen to petition the Board of Trade to make new denominations of standards, is, therefore, wholly irregular.

213. The "general regulations" made under section 5 of the Act of 1904 are "for the guidance of the local authorities, etc.," and can only prohibit the stamping of weights, measures, and weighing or measuring instruments "in cases where the nature, denomination, material, or principle of construction of the weight, measure, or instrument appears likely to facilitate the perpetration of fraud." This power to prohibit seems to include a general one, leaving it to the inspector to decide in cases not provided for under section 6, whether the article in question appears likely to *facilitate* the perpetration of fraud or not. It is frequently forgotten that it is the inspector on whom the responsibility of administering the Act depends, subject to the Regulations of the Board of Trade and any special regulations that may have been made by his local authority.

214. It is also the duty of the Board of Trade to examine and test all patterns of weights, measures, and weighing instruments that may be submitted to them by the local authorities, manufacturers, or dealers. If such be found so constructed as to facilitate the perpetration of fraud their use may be prohibited; if not so found they may be certified, and inspectors cannot refuse to stamp them (*post*, p. 243). They are empowered to take fees for the examination and verification of weights, measures, and weighing instruments brought to them for that purpose which are not standard nor coin weights.

215. From time to time they may, with the concurrence of the Treasury, hold local inquiries as to the manner in which the local authorities discharge their duties. If differences arise between any inspector and any other person as to the meaning of the Board of Trade Regulations, or as to testing such difference at the request of either party shall be determined by the Board, whose decision shall be final. They are also the authority for determining the accuracy or efficiency of any weight, measure, or weighing, or measuring instrument of which the accuracy or efficiency is in dispute, when such is referred to them by the Court.

216. They are also to hold examinations for the purpose of ascertaining whether applicants for the post of inspector under the local authority have sufficient practical knowledge for the proper performance of the duties of inspectors of weights and measures. They are to grant certificates to those candidates who pass the examination.

Powers and Duties of Local Authorities.

217. In boroughs in *England* and *Wales* the local authorities are the town councils. In the counties under the Local Government Act, 1888 (51 & 52 Vict. c. 41, s. 3, *post*, p. 376), the county councils are to be the "local authorities" under the Acts relating to weights and measures.

In *Scotland*, in the counties the councils established under the Local Government (Scotland) Act, 1889 (52 & 53 Vict. c. 50, s. 11, *post*, p. 377), and in the boroughs the magistrates are the "local authorities" for the administration of the Acts relating to weights and measures.

The provisions of the Weights and Measures Acts are carried into execution by the local authorities as provided by those Acts.

In *Ireland* the local authorities in the boroughs are the town councils, and in the counties they are the councils established under the Local Government (Ireland) Act, 1898 (61 & 62 Vict. c. 37, s. 4), but the general administration and selection of inspectors under the Inspector-General of Constabulary in both counties and boroughs outside the Metropolitan District. In the county borough of Dublin the local authority is the corporation; in the remainder of the Metropolitan Police District it is the Commissioners of the Dublin Metropolitan Police; and in certain urban districts (*post*, p. 235) the district councils may appoint inspectors.

218. The local authorities are (under the provisions of section 40 of the Act of 1878, *post*, p. 166) from time to time to provide such local standards as they deem requisite for the purpose of comparison by way of verification or inspection, in

accordance with the Act, of all weights and measures in use in their respective districts, and to fix the places where such standards are to be kept. It appears that the denominations of standards necessary depend ultimately on the requirements of traders in the respective districts (see *ante*, par. 210, p. 127, and *post*, p. 166). Local standards of weight are to be verified every five years, and those of measures every ten. These standards are to be renewed, repaired, and verified as often as may be necessary, as they cannot be used without reverification by the Board of Trade after they become defective by wear or accident. The verification may be done either by the Board of Trade by comparison with their standards, or locally under certain conditions by a justice of the peace. The local authorities may provide "working standards," to be verified by the Board of Trade, to be used by the inspectors instead of the local standards (see *post*, pp. 166, 204).

219. Any person has the right to inspect the local standards at reasonable time and place, by giving reasonable notice in writing to the person having the custody of them, and upon payment of reasonable charges for the production of them (*post*, p. 169).

220. The local authorities appoint the inspectors to carry out the provisions of the Weights and Measures Acts, and have power to dismiss inspectors for good cause (*post*, p. 169). There may be different inspectors appointed for verification, inspection, and enforcing the provisions for the sale of coal respectively. Inspectors may with the consent of their local authority conduct, on behalf of such authority, prosecutions before a Court of Summary Jurisdiction.

221. Two or more local authorities may combine for the purpose of carrying out the provisions of the Weights and Measures Acts. Inspectors appointed under such an agreement shall have all the powers and duties as if they had been appointed by each of the local authorities who so combine (*post*, p. 176).

222. The local authorities have power to erect fixed weighing instruments at convenient places for the purposes of weighing coal. They may also appoint proper persons to attend and keep such weighing instruments (*post*, p. 222). They may from time to time make, alter, and revoke bye-laws for regulating the sale of coal, the carriage of weighing instruments on vehicles in which coal is carried for sale, prescribing distances and fees in relation to the weighing or re-weighing of coal in course of delivery. Penalties may be imposed, not exceeding £5 for breach of any bye-law (see *post*, p. 223). The bye-laws are subject to the approval of the Board of Trade, and are to be published in such a manner as the local authority think sufficient for giving notice to all persons interested. A copy of every such bye-law must be sent to the Board of Trade (*post*, p. 224).

223. The local authorities, or other authority who appoint inspectors of weights or measures, if so directed by the general regulations of the Board of Trade may make special regulations as respects their areas in relation to the inspection of weights and measures, and weighing instruments, and to other matters which can in the opinion of the Board of Trade be better regulated by special regulations. Such matters as the frequency of inspectors' visits, periodical verification, etc., may be left to special regulations of the local authorities; but uniformity in the degree of accuracy required in testing weights and measures, and the sensibility of weighing machines, is secured by the general regulations of the Board of Trade. The local authorities cannot by these special regulations at all regulate the conduct or rights of the tradesman which can be affected by the Acts only.

*Powers and Duties of Inspectors.**

224. The inspectors are appointed, and for just cause may be dismissed, by the local authorities, who assign to them

* In all cases the Act and decided cases given in the subsequent pages of this book should be consulted by means of the index; the following paragraphs contain only a summary, with remarks of a general nature.

their respective duties. A person cannot now be appointed an inspector until he has obtained the Board of Trade certificate for having passed an examination as to his practical knowledge of those matters with which, in the course of his duties, he will have to deal (*post*, p. 245). If an inspector appointed after 26th July, 1889, act without having passed the examination, he will be liable to refund to the public all fees received by him in contravention of the Act, although he may have paid them over to his local authority; * and will render himself liable to a penalty for misconduct (*post*, p. 174).

The Act of 1904 gives the Board of Trade wide powers as to directing the inspectors in the discharge of their duties, but it does not make them in any sense officials of that department of State, they remain the officials of the local authorities.

225. Each inspector on his appointment must enter into a recognizance to the Crown in the sum of £200 for the due performance of his duties, the payment of fees received by him, and for the safe custody of the various appliances under his care (*post*, pp. 170, 394). So long as he holds office he cannot be a person deriving any profit from, or employed in, making, adjusting, or selling of weights, measures, or measuring or weighing instruments (*post*, p. 214); but, under certain circumstances, the Board of Trade may authorize an inspector to act as an adjuster of weights and measures (*post*, p. 215).

226. The inspectors must make comparisons of the local standards with others which have been verified or re-verified by the Board of Trade. This comparison must be made, at least, once in every five years in the case of standards of weight, and once in every ten years in cases of those of measures (*post*, p. 167).

227. The most important duties of an inspector are those connected with the inspection, stamping, and verification of weights, measures, weighing and measuring instruments. These duties are to be performed at the times, place, and

* Compare the case of *Wedderburn* v. *Davis*, noted *post*, p. 171.

in the manner prescribed by the Board of Trade Regulations or special regulations of the local authority. The extent of his powers as regards the weighing and measuring appliances to which they apply is noted in pars. 237 to 241 below.

228. All weights, excepting where the small size of the weight renders it impracticable, must have the denomination of the weight stamped on the top or side. Measures of capacity must have their denominations stamped on the outside in legible figures and letters (*post*, p. 159). If the conditions mentioned in this paragraph are not complied with, these articles must not be stamped. The fees authorized for verification and inspection, which alone an inspector is at liberty to take, are set out, *post*, p. 231. No rebate, discount, or commission of any kind is to be allowed nor may any allowance be made for the use of tools, premises, machinery, or instruments, or assistance rendered for the purposes of verification, etc., unless in certain specified cases (*post*, p. 215).

229. It is most important to note that, *if found correct*, it is *primâ facie* the duty of the inspector to stamp all weights, measures, and instruments brought to him for that purpose. He can only refuse to stamp any particular article in cases where its material or mode of construction appears likely to *facilitate* the perpetration of fraud, or where the Board of Trade has refused to certify the said pattern of article, or where the Board of Trade regulations give him power so to refuse. The earlier portion of this work has been written to enable the inspectors to judge for themselves whether the mode of construction of a weighing instrument is "likely to facilitate the perpetration of fraud." It will not be enough for the inspector, in order to justify a refusal to stamp any particular article the use of which has not been prohibited to show that it may be fraudulently used, but he must show that it would *facilitate* the perpetration of fraud. In case of a dispute the matter should be referred to the Board of Trade, whose decision is final.

Mere adjuncts by way of ornamentation, such as projecting ends, are not sufficient to justify a refusal to stamp unless they would facilitate the perpetration of fraud. Cases in which such things are made use of for purposes of fraud are covered by section 26 of the Act of 1878 (*post*, p. 158).

Weighing instruments which are unjust against the seller are to be condemned in the same way as if they were unjust against the buyer. The Act does not recognize the distinction which is sometimes drawn in the two cases.

230. It may here be pointed out that a tradesman who is inclined to perpetrate fraud has much more favourable opportunities of doing so by clever and skilful manipulation of correct weighing instruments, when using them, than by any comparatively clumsy device or alteration of the machine itself. The inspector should keep on the look out for such cases, and, on discovering wilful commission of fraud, act under the power given him by sections 26 and 48 of the Act of 1878 (*post*, pp. 158, 173).

231. A weight, measure, or weighing instrument duly stamped by an inspector is a legal weight, or measure, or instrument throughout the United Kingdom, so long as it remains just, and is not liable to be re-stamped because used in any place other than that in which it was originally stamped (*post*, pp. 172, 249). And no authority can require such to be re-stamped, so long as it is correct and unaltered.

232. An inspector for a county may enter into a place within the district of an inspector appointed by another local authority, and then verify and stamp the weights and measures of any person residing within his own district, but if he abuse this power he becomes liable to a fine of 20*s.* for every weight or measure he so stamps (*post*, p. 171). A person is considered to reside in the district in which his principal place of business is situated.

233. Any inspector, authorized in writing by a justice for that purpose, may at all reasonable times inspect all

weights, measures, scales, balances, steelyards, and weighing machines, used or in possession of any person or on any premises for the use of trade, and he may enter any place where he has reasonable cause to believe that there is anything which he is authorized to inspect (*post*, p. 173). He must on all occasions, when acting in pursuance of the power conferred by the warrant, have it with him. The occupier of the premises is entitled to see the warrant when the inspector demands an entrance.*

234. He has also power to seize any articles which are liable to forfeiture. These are: Weights or measures in one's possession for use in trade, and not of the denomination of some Board of Trade standard (*post*, p. 153); any weight, measure, scale, balance, or steelyard which is false or unjust, and in the possession of any one for use in trade, or which is used for the wilful commission of any fraud (*post*, pp. 153, 158). Any weighing instrument used for the last-mentioned purpose is also liable to forfeiture (*post*, pp. 158, 228); so, too, are any measures or weights which are unstamped and in the possession of any one for use in trade, and all measures, weights, and weighing instruments having thereon a forged or counterfeit stamp (*post*, pp. 160, 162, 211). A genuine stamp transferred from one article to another is a forged stamp.

235. Where an inspector is appointed by two or more local authorities acting in combination, he has, in each district of those several local authorities, the same powers as if he were appointed by the local authority of such district (*post*, p. 176).

236. In Ireland there are generally speaking *ex officio* inspectors, members of the Royal Irish Constabulary or the Dublin Metropolitan Police. The Corporation of Dublin appoints its own inspectors. So also do the Urban District Councils of Blackrock, Dalkey, New Kilmainham, Kingstown, Pembroke and Rathgar, all in the county of Dublin.

* There is a valuable article on the subject of Inspection by Mr. Moore, in the *Monthly Review*, vol. ii. p. 387, and one by Mr. Edwards in vol. xii. p. 262.

237. The Weights and Measures Acts do not apply to all weighing or measuring appliances, but only to those which are "in use for trade." A complete and accurate definition of this phrase cannot well be given, but an examination of the cases which are referred to in the index will enable an inspector to judge for himself whether any particular articles are liable to inspection or not. Generally speaking, the term "use for trade" includes any method of using by which goods sold are measured, weighed, or are checked in delivery. It is not contrary to law to use in the United Kingdom weights or measures (other than imperial or metric) which are used only in respect of contracts that are to be executed entirely outside the United Kingdom, as for instance in the making or packing of goods that are to be delivered or sold in China according to the weights or measures of that country. (See *Rossiter* v. *Cahlmann*, noted *post*, p. 150.) Besides the examples which are referred to in the index, it appears that casks for liquor (such as beer is sold in) become "measures" within the meaning of the Acts if they are used as such, but not if they are filled by means of stamped measures; in the latter case they are merely containing vessels, and come within the terms of the proviso in section 22 of the Act of 1878 (*post*, pp. 152, 161). For similar reasons, it has been held that churns used for conveying and selling milk are measures within the meaning of the Act (*post*, p. 157).

238. It must not be forgotten that (with, perhaps, the exception of the case of coal) sale by bulk is not interfered with by the Weights and Measures Acts (*post*, p. 150). If sale be by a specified weight or measure, then the imperial or metric standards alone can be referred to, and all weights and measures used must be stamped. But there is nothing to prevent a person from buying a quantity of anything for a certain sum, seeing the amount he is receiving for his money. Instances of such a transaction are the familiar ones of—"a cup of tea," "a small whisky," "a pennyworth of milk." These have been defined as a *sale "by price"* (*post*, pp. 150, 153). This term so used is erroneous. It is a popular expression for sale in bulk, or of a concrete quantity of some

commodity apart from any reference to a standard of weight or measure. The object of the Acts is to have uniformity and accuracy in business transactions, to prevent fraud, and not to interfere with ordinary dealing by compelling persons to have goods weighed or measured unnecessarily. The sale of coal is, under the Acts, perhaps an exception to this rule. There are separate statutes dealing with the sale of bread by weight, and prescribing in *Ireland* the only measures which may be used in the sale of wine by retail in refreshment houses (*post*, pp. 331, 365).

239. Weighing and measuring instruments used by chemists in their laboratories, or used by dispensing chemists for ascertaining specific gravities, do not appear, at first sight, to come within the term "used for trade." They are used for purposes of manufacture. A physician's prescription is a direction, usually in Latin, to the chemist, as to the mode of manufacture of a certain medicine. The patient pays for the compounder's skill in the price charged. It has not been decided whether the transaction is the purchase of the separate quantities of the ingredients mentioned, or whether it is merely the sale of a "bottle of medicine," a "box of pills," etc. The onus of proving that such instruments are not used for trade lies on the chemist. It may here be noticed that the correction and testing of the accuracy of balances for delicate weighings is a subject to which much attention has been given by members of the Pharmaceutical Society during the past sixty or seventy years. In many scientific investigations it is only important to have the weights relatively correct, and in such cases the method of weighing adopted is one such that the result of the operation is unaffected by slight errors in the balance itself. Great care must be observed in stamping a delicate balance, as the mere operation of affixing or cutting a stamp on the beam may make it so incorrect as to be useless for the purposes for which it was intended to be used.

240. All weighing and measuring appliances belonging to any public department, and inspected from time to time

by the proper Government officer, are not within the provisions of the Weights and Measures Acts. This exemption continues, although such weights or measures are used, by those to whom they are entrusted, for their own purposes, as when a postmaster uses the post-office scales for selling goods in his shop (see p. 157, *post*). But the authorities frequently request the inspectors to examine and test their appliances, as in the case of prisons, army canteens, etc. Fees are usually paid for the services rendered ; expenses should be asked for.

241. Under the Acts relating to the Inland Revenue brewers and excise traders must keep weights and measures for the use of the officers of Excise. In many cases the liquor is subsequently sold to traders and invoiced according to the quantity or weight ascertained for revenue purposes. Weights and measures so used come within the Weights and Measures Acts as being used in trade.

242. When referring to decided cases, the facts of each case must be borne in mind. The rules or propositions of law laid down in a judgment are not necessarily binding in future cases unless they were necessary to support the decision arrived at in the particular case in which they were enunciated. Hence cases are frequently "distinguished" (or narrowed in their application) by subsequent cases. The state of the law at the date of the case referred to must not be forgotten ; it does not follow, for example, that because a weigh-bridge could not, in the year 1862, be condemned as unjust unless so found after being balanced by a balance ball, that the use of balance balls under certain conditions cannot be prohibited or dealt with by the Board of Trade regulations.

243. In construing the statutes or regulations, the inspector should bear in mind that the common law right of the trader to use his own weights, etc., if they are correct, exists where it is not expressly curtailed by statute, hence in doubtful cases it is safer to construe a rule in favour of the trader's claim. For illustrations of this principle, the reader is referred to the cases of *Starr* v. *Stringer* (*post*, p. 160) and

Henton v. *Radford* (*post*, p. 159), and also to the remarks already made on the latter case (*ante*, p. 40). The Board of Trade have now under the Act of 1904 large powers as to prohibiting the use of certain forms of weighing appliances.

244. All the provisions relating to the powers and duties of inspectors under the Weights and Measures Acts apply to all weights and measures and weighing instruments used in factories, workshops, or mines, for checking or ascertaining the wages of any person employed therein, in the same manner as if they were used for the sale of goods (*post*, p. 329). The provisions of the Acts have not been extended to merchant ships (see *post*, p. 378).

245. In the case of mines, the inspectors must inspect all weights, measures, and weighing instruments used therein, at least once in every six months. They must also inspect all measures and gauges used in mines, and may exercise their powers of entry for the purposes of inspection under section 24 of the Act of 1878, without being authorized by a justice of the peace (*post*, p. 329).

246. In addition to the powers and duties mentioned in this chapter, the inspectors have *additional* powers with respect to the sale of coal. The special provisions with regard to the sale of coal will now be given.

Sale of Coal.

247. All coal must be sold by weight. This is the only provision of the Weights and Measures Act, 1889, relating to the sale of coal which applies to Scotland; in that country the sale of coal is regulated by the Burgh Police Act, 1892 (*post*, p. 346). In many towns there are local Acts still in force dealing with the sale of coal; a list of such places is given, *post*, p. 226. The local Act for London and Westminster is given, *post*, p. 340.

248. Where a quantity of coal, exceeding 2 cwt., is delivered by means of any vehicle, before any part of the coal is unloaded a ticket in the prescribed form must be delivered or sent by the seller to the purchaser or his servant. The seller is liable to a fine of £5 if no such ticket be delivered, or if the quantity of coal delivered be less than that mentioned on the ticket. The person attending the vehicle is liable to a fine of £5 if he has received such a ticket and refuses or neglects to deliver it to the purchaser, or to show it to an inspector when requested so to do. Before delivery the vehicle must be weighed, and also the coal contained therein. These particulars must be inserted on the ticket; the true weight of the vehicle must be marked thereon from time to time (*post*, p. 220).

249. If any person in charge of a vehicle in which coal is being carried wilfully makes any false statement as to the true weight of the vehicle, or wilfully does any act by which either the seller or purchaser is defrauded, he is liable to a fine of £5. So, too (in the case of selling a quantity under 2 cwt.), any one who fraudulently delivers a less quantity than that agreed on to be sold, is liable to a similar penalty (*post*, p. 221).

250. An inspector may require any coal, or any vehicle used for the carriage of coal in bulk, to be weighed or re-weighed by any weighing instrument stamped by an inspector of weights and measures (*post*, p. 222). If there is no weighing machine at the place where the coal is sold, then the seller must keep one, and must weigh, if required by the inspector, any coal before the sale or delivery thereof (*post*, p. 221). No seller of coal can be compelled to take his coal more than half a mile for the purpose of having it weighed (*post*, p. 223).

251. An inspector has very wide powers with regard to entering any place where coal is kept for sale. He may stop any vehicle carrying coal for sale or delivery to a purchaser, and may weigh any coal found in course of delivery to a purchaser (*post*, p. 225). If the person in charge of the

vehicle has no ticket, then the inspector should ascertain whether it was otherwise sent to the purchaser. If the coal turn out of less weight than represented by the seller, he is liable to a fine of £5. No penalty is incurred by the seller, unless he make a representation as to the quantity sold (*post*, p. 225).

Mr. Rutherford, in vol. xii., p. 231, of the *Monthly Review*, gives an account of various fraudulent devices resorted to by coal hawkers.

THE WEIGHTS AND MEASURES ACT, 1878.

41 & 42 Vict. c. 49.

An Act to consolidate the Law relating to Weights and Measures.
(*8th August*, 1878).

Be it enacted, etc.

Preliminary.

1. This Act may be cited as the Weights and Measures Act, 1878. Short title.

2. [*Repealed Stat. Law Rev.* 1894.] Commencement.

I.—Law of Weights and Measures.

Uniformity of Weights and Measures.

3. The same weights and measures shall be used throughout the United Kingdom. Uniformity.

Standards of Measure and Weight.

4. The bronze bar and the platinum weight, more particularly described in the first part of the First Schedule to this Act, and at the passing of this Act deposited in the Standards Department of the Board of Trade in the custody of the Warden of the Standards, shall continue to be the imperial standards of measure and weight, and the said bronze bar shall continue to be the imperial standard for determining the imperial standard yard for the United Kingdom, and the said platinum weight shall continue to be the imperial Imperial standards, *post*, p. 196.

standard for determining the imperial standard pound for the United Kingdom.

Parliamentary copies of imperial standards.

5. The four copies of the imperial standards of measure and weight, described in the second part of the First Schedule to this Act, and deposited as therein mentioned, shall be deemed to be parliamentary copies of the said imperial standards.

The Board of Trade shall, as soon as may be after the commencement of this Act, cause an accurate copy of the imperial standard of measure and an accurate copy of the imperial standard of weight to be made of the same form and material as the said standards, and it shall be lawful for Her Majesty in Council, on the representation of the Board of Trade, to approve the copies so made, and the copies when so approved shall be of the same effect as the said parliamentary copies, and are in this Act included under the same parliamentary copies of the imperial standards of measure and weight.

Restoration of imperial standards.

6. If at any time either of the imperial standards of measure and weight is lost or in any manner destroyed, defaced, or otherwise injured, the Board of Trade may cause the same to be restored by reference to or adoption of any of the parliamentary copies of that standard, or of such of them as may remain available for that purpose.

Restoration of parliamentary copies.

7. If at any time any of the parliamentary copies of either of the imperial standards is lost or in any manner destroyed, defaced, or otherwise injured, the Board of Trade may cause the same to be restored by reference either to the corresponding imperial standard, or to one of the other parliamentary copies of that standard.

Board of Trade standards, *post*, p. 198.

8. The secondary standards of measure and weight which, having been derived from the imperial standards, are at the commencement of this Act in use under the

direction of the Board of Trade, and are mentioned in the Second Schedule to this Act, and no others (save as hereinafter mentioned), shall be secondary standards of measure and weight, and shall be called Board of Trade standards.

If at any time any of such standards is lost or in any manner destroyed, defaced, or otherwise injured, the Board of Trade may cause the same to be restored by reference either to one of the imperial standards or to one of the parliamentary copies of those standards. Restoration.

The Board of Trade shall from time to time cause such new denominations of standards, being either equivalent to or multiples or aliquot parts of the imperial weights and measures ascertained by this Act, or being equivalent to or multiples of each coin of the realm, for the time being, as appear to them to be required, in addition to those mentioned in the Second Schedule to this Act, to be made and duly verified, and those new denominations of standards when approved by Her Majesty in Council shall be Board of Trade standards in like manner as if they were mentioned in the said schedule. New denominations of standards.

It shall be lawful for Her Majesty by Order in Council to declare that a Board of Trade standard for the time being of any denomination, whether mentioned in the said schedule or approved by Order in Council, shall cease to be such a standard.

Such standards of the Board of Trade as are equivalent to or multiples of any coin of the realm for the time being shall be standard weights for determining the justness of the weight of and for weighing such coin.

The above provisions as to standards now apply to those of the metric system, which are now verified and stamped under the same conditions as British.

Aliquot parts of standards.

It is contemplated by this section that new standards will be required for trade. By sect. 19 (*post*, p. 149) *any multiple or aliquot part* of an imperial standard may be used for trade. One view of the Act is that the Board of Trade should make standards for such measures as $\frac{1}{3}$rd of a quart, or $\frac{1}{3}$rd of a gill, or $\frac{1}{5}$th of a quart (each being an aliquot part of the gallon), otherwise persons could not carry out contracts which are authorized by this section. This interpretation of "aliquot part" is that taken by Sir Ed. Fry (late Lord Justice of the Court of Appeal) in *Bellamy* v. *Pow*, 60 J. P. 712, noted to s. 24, *post*, p. 153.

Metric standards.

The provisions of this section are extended to the weights and measures of the metric system by the Weights and Measures (Metric System) Act, 1897, as follows:—

The Board of Trade standards which may be made under sect. 8 of the Weights and Measures Act, 1878, shall include metric standards derived from the iridio-platinum linear standard metre and iridio-platinum standard kilogram deposited with the Board of Trade and numbered 16 and 18 respectively: 60 & 61 Vict. c. 45, s. 2 (1).

All new standards made under the principal section and the new ones of the metric system are incorporated in the Second Schedule, *post*, p. 198.

Local standards.

9. The standards of measure and weight which are at the commencement of this Act legally in use by inspectors of weights and measures for the purpose of verification or inspection, and all copies of the Board of Trade standards which after the commencement of this Act are compared with those standards and verified by the Board of Trade for the purpose of being used by inspectors of weights and measures under this Act as standards for the verification or inspection of weights and measures, shall be called local standards.

Imperial Measures of Length.

Imperial standard yard.

10. The straight line or distance between the centres of the two gold plugs or pins (as mentioned in the First Schedule to this Act) in the bronze bar by this Act declared to be the imperial standard for determining the imperial standard yard measured when the bar is at the temperature of 62° of Fahrenheit's thermometer, and

when it is supported on bronze rollers placed under it in such manner as best to avoid flexure of the bar, and to facilitate its free expansion and contraction from variations of temperature, shall be the legal standard measure of length, and shall be called the imperial standard yard, and shall be the only unit or standard measure of extension from which all other measures of extension, whether linear, superficial, or solid, shall be ascertained.

The length thus ascertained in an absolute distance independent of the temperature; thus when cooled to freezing point the standard, still a nominal yard, will be 0·01 of an inch too short, owing to the contraction of the metal. In ordinary use this error may be neglected. The temperature 62° F. is taken as an average one.

Other linear measures.

11. One third part of the imperial standard yard shall be a foot, and the twelfth part of such foot shall be an inch, and the rod, pole, or perch in length shall contain 5 such yards and a half, and the chain shall contain 22 such yards, the furlong 220 such yards, and the mile 1760 such yards.

Superficial measures.

12. The rood of land shall contain 1210 square yards according to the imperial standard yard, and the acre of land shall contain 4840 such square yards, being 160 square rods, poles, or perches.

Imperial Measures of Weight and Capacity.

Imperial standard pound, *post*, p. 196.

13. The weight *in vacuo* of the platinum weight (mentioned in the First Schedule to this Act), and by this Act declared to be the imperial standard for determining the imperial standard pound, shall be the legal standard measure of weight, and of measure having reference to weight, and shall be called the imperial standard pound, and shall be the only unit or standard measure

of weight from which all other weights and all measures having reference to weight shall be ascertained.

For notes on weight *in vacuo*, see pars. 1, 13, 178, 189, *ante*, pp. 1, 6, 110, 115.

Other imperial weights.

14. One sixteenth part of the imperial standard pound shall be an ounce, and one sixteenth part of such ounce shall be a dram, and one seven-thousandth part of the imperial standard pound shall be a grain.

A stone shall consist of 14 imperial standard pounds, and a hundredweight shall consist of 8 such stones, and a ton shall consist of 20 such hundredweights.

480 grains shall be an ounce troy.

All the foregoing weights except the ounce troy shall be deemed to be avoirdupois weights.

Imperial measures of capacity.

15. The unit or standard measure of capacity from which all other measures of capacity, as well for liquids as for dry goods, shall be derived, shall be the gallon containing 10 imperial standard pounds weight of distilled water weighed in air against brass weights, with the water and the air at the temperature of 62° of Fahrenheit's thermometer, and with the barometer at 30 inches.

Quart.

The quart shall be one fourth part of the gallon, and the pint shall be one eighth part of the gallon.

Peck. Bushel. Quarter. Chaldron.

Two gallons shall be a peck, and 8 gallons shall be a bushel, and 8 such bushels shall be a quarter, and 36 such bushels shall be a chaldron.

According to the latest experiments, a cubic inch of water, under the above conditions, weighs 252·286 grains; hence, a gallon will contain 277·463 cubic inches.

16. [*Related to measure of capacity for goods formerly sold by heaped measure, and is repealed by sect.* 5 *of the Weights and Measures Act*, 1889.]

17. In using an imperial measure of capacity, the same shall not be heaped, but either shall be stricken with a round stick or roller, straight and of the same diameter from end to end, or if the article sold cannot from its size or shape be conveniently stricken shall be filled in all parts as nearly to the level of the brim as the size and shape of the article will admit.

Measure to be stricken or filled up.

18. [*Repealed.*]

The substituted provisions are contained in the Weights and Measures (Metric System) Act, 1897, as follows:—

Metric equivalents.

It shall be lawful for the Queen by Order in Council to make a table of metric equivalents in substitution for the table in Part I. of the Third Schedule to the Weights and Measures Act, 1878, and, as from the date at which the Order in Council comes into operation, Part I. of the said schedule and sects. 18 and 38 of the said Act shall be repealed: 60 & 61 Vict. c. 46, s. 2 (2).

The Order in Council under this section was made on 20th May, 1898, and its contents are inserted (*post*, p. 202) in the place of Part I. of Third Schedule.

19. Every contract, bargain, sale, or dealing made or had in the United Kingdom for any work, goods, wares, or merchandise or other things which has been or is to be done, sold, delivered, carried, or agreed for by weight or measure, shall be deemed to be made and had according to one of the imperial weights or measures ascertained by this Act, or to some multiple or part thereof, and if not so made or had shall be void; and all tolls and duties charged or collected according to weight or measure, shall be charged and collected according to one of the imperial weights or measures ascertained by this Act, or to some multiple or part thereof.

Use of imperial weights or measures in trade.

Such contract, bargain, sale, dealing, and collection of tolls and duties as is in this section mentioned is in this Act referred to under the term "trade."

Definition of trade.

No local or customary measures, nor the use of the heaped measure, shall be lawful.

Penalty.

Any person who sells by any denomination of weight or measure other than one of the imperial weights or measures, or some multiple or part thereof, shall be liable to a fine not exceeding 40*s.* for every such sale.

Foreign sales.

This section only applies to contracts where the weighing or measuring of the goods takes place or is to take place within the United Kingdom. If goods are to be sold in a foreign country by the weights or measures of that country the contract may be made in terms of such weights and measures in the United Kingdom: *Rosseter* v. *Cahlmann*, 8 Ex. 361. It appears that foreign weights and measures may be used in this country in the manufacture or making up of goods for the foreign market.

Sale in bulk,

This Act is intended to enforce uniformity in the use of weights and measures, and to prevent persons from being deceived by short weight, and consequently only applies to articles which are sold by weight or measure, and does not prohibit the sale of things in bulk: *Jones* v. *Giles*, 10 Ex. 119; 23 L. J. Ex. 292; 24 L. J. Ex. 259; *Craig* v. *McPhee*, 48 J. P. 115; *Bellamy* v. *Pow*, 60 J. P. 712. A sale, however, is not illegal although a local measure be used, if such measure consists of so many imperial pounds. The sale in that case is nominally by measure, but actually by such weight as is recognized by the Act: *Hughes* v. *Humphreys*, 23 L. J. Q. B. 356; 3 E. & B. 594. A contract to deliver "600 stones of hay, each stone to consist of 24 imperial standard pounds" is not illegal, as it is a contract to deliver 24 times 600, that is 14,400 pounds of hay, and not one to deliver 600 "Sutherland" stones of hay: *Lang* v. *Cameron*, 21 Sc. C. S. 337. So too in the case of sale by the ton "long weight," that is, a ton of 2400 lbs. instead of 2240, the Act is not infringed because the "ton long weight" is a multiple of the imperial pound: *Jones* v. *Giles*, 10 Ex. 119; 23 L. J. Ex. 292, confirmed on appeal, 24 L. J. Ex. 259.

by local measures or weights,

or by long weight,

See also *Spencer* v. *Till*, noted *post*, p. 161.

or glass.

Sale of a "glass" of beer is not illegal unless it be understood that by the "glass" a definite measure is meant: s. 22 below (and case of *Bellamy* v. *Pow*, noted to s. 24). See also 35 & 36 Vict. c. 94, s. 8, *post*, p. 363.

The use in trade of weights and measures of the metric system is made lawful by the Weights and Measures (Metric System) Act, 1897, which enacts that nothing in the above section "shall make void any contract, bargain, sale, or dealing, by reason only of its being made or had according to weights or measures of the metric system, and a person using or having in his possession a weight or measure of the metric system shall not by reason thereof be liable to any fine" (60 & 61 Vict. c. 46, s. 1).

At smelting works unstamped scales were used for the purpose of checking the weight of the produce of the works after the lead had been made into pigs; these were consigned to purchasers who made returns of weight of lead received which were accepted. The weight was specified on the invoice invariably sent out with the lead; this weight was ascertained sometimes by counting the pigs, and sometimes by the unstamped machine. The weights of the pigs were entered in the seller's books; the railway company accepted the consignee's weights as being correct. *Held*, by the Queen's Bench Div. Court, that the machine was used for trade. CHARLES, J.: "I am of opinion that this pair of beam-scales were used for trade within the definition of 'trade' contained in sect. 19. The sense of that section is that everything is trade which concerns a contract for the sale of goods by weight or measure. Upon the findings in the case it is quite clear that this particular beam and scales were used for the sale of goods by weight or measure." WRIGHT, J.: "The result would, however, have been otherwise had the respondent's practice been to enter the weights in the books kept at the works, and to allow them to go no further": *Crick* v. *Theobald*, 64 L. J. M. C. 217. What is trade.

In the Scotch herring fishery, the measures known as the "cran," and "quarter cran," if duly stamped by the Fishery Board for Scotland, are legal measures. Penalty for using unstamped crans, £5 for first, and £20 for subsequent offence (52 & 53 Vict. c. 23, s. 4). Herrings.

20. All articles sold by weight shall be sold by avoirdupois weight; except that— Sale by avoirdupois weight, with exceptions.

(1) Gold and silver, and articles made thereof, including gold and silver thread, lace, or fringe; also platinum, diamonds, and other precious metals or stones, may be sold by the ounce troy or by any decimal parts of such ounce; and all contracts, bargains, sales, and dealings in relation thereto shall be deemed to be made and had by such weight, and when so made or had shall be valid; and

(2) Drugs, when sold by retail, may be sold by apothecaries' weight.

Every person who acts in contravention of this section shall be liable to a fine not exceeding £5.

Unless a "carat" consist of a certain number of grains, or is

known as a certain decimal part of an ounce troy, it cannot be used under this section.

Contract, etc., in metric weights and measures.

21. A contract or dealing shall not be invalid or open to objection on the ground that the weights or measures expressed or referred to therein are weights or measures of the metric system, or on the ground that decimal subdivisions of imperial weights and measures, whether metric or otherwise, are used in such contract or dealing.

See cases of *Bellamy* v. *Pow* and *Ross* v. *Johnston*, noted to sect. 24 below.

Sale in vessel not imperial or local measure.

22. Nothing in this Act shall prevent the sale, or subject a person to a fine under this Act for the sale, of an article in any vessel, where such vessel is not represented as containing any amount of imperial measure, nor subject a person to a fine under this Act for the possession of a vessel where it is shown that such vessel is not used nor intended for use as a measure.

From the exception created by this section, and the wording of sect. 29, it appears that the sale of intoxicating liquor by wholesale in casks purporting to contain a certain number of gallons, is, unless the casks are filled by means of stamped measures, an offence against the provisions of sect. 29.

Price lists, etc., denoting greater or less weight or measure than imperial weight or measure.

23. Any person who prints, and any clerk of a market or other person who makes, any return, price list, price current, or any journal or other paper containing price list or price current, in which the denomination of weights and measures quoted or referred to denotes or implies a greater or less weight or measure than is denoted or implied by the same denomination of the imperial weights and measures under this Act, shall be liable to a fine not exceeding 10*s.* for every copy of every such return, price list, price current, journal, or other paper which he publishes.

24. Every person who uses or has in his possession for use for trade a weight or measure which is not of the denomination of some Board of Trade standard, shall be liable to a fine not exceeding £5, or in the case of a second offence £10, and the weight or measure shall be liable to be forfeited.

Use or possession of unauthorized weight or measure.

For the meaning of "trade," see sect. 19 above, and cases there noted.

Use for trade.—The respondents, who were ironfounders, used a weighing machine for the purpose of checking iron delivered to them with the invoices sent by the consignors. On the machine was found a weight of 120 lbs. which was unstamped. It was held, on appeal, that the magistrates ought to have convicted, as it was in the respondents' possession "for the use of trade": *Horder* v. *Roberts*, 44 J. P. 256 (see also *Crick* v. *Theobald*, noted *ante*, p. 151).

Unstamped measures.

The effects of sects. 19 and 22 in conjunction with this is (in the opinion of Sir Edward Fry, late Lord Justice of the Court of Appeal) that "$\frac{1}{3}$ gill" is of the "denomination" (*i.e.* "gill") of a Board of Trade standard, and that local standards should be made under sect. 8 as required by trade from time to time; hence a publican who sells the contents of a vessel truly marked "$\frac{1}{3}$ gill" as "threepenny-worth" commits no offence against this section.—*Held*, by the Queen's Bench Divisional Court, that the publican could not be convicted, as the measure was only used for his own information when "threepenny-worth" was asked for, and that one may sell by a multiple part of any imperial standard: *Bellamy* v. *Pow*, 60 J. P. 712. This case was discussed and followed by the Recorder of Maidstone in *Froud* v. *Welch*, 9 M. R. 232.

It was held in the High Court of Justiciary in Scotland that the offence of having an unstamped measure for use in trade was only committed when the measure was used for selling *by measure*, and not selling *by price*, as "fourpenny-worth," etc.: *Ross* v. *Johnston*, 3 M. R. 78, 13 Sc. Jus. Ca. 73. Compare cases of *Jones* v. *Giles* and *Craig* v. *McPhee*, noted under sect. 19, *ante*, p. 150.

In some English counties measures of $\frac{1}{3}$ gill which were stamped under the Acts repealed by this Act are used for selling "small whiskies." See note to sect. 45, *post*, p. 172.

Unjust Weights and Measures.

25. Every person who uses or has in his possession for use for trade any weight, measure, scale, balance,

Unjust measures, weights,

Sect. 25.

balances, or weighing machines.

steelyard, or weighing machine which is false or unjust, shall be liable to a fine not exceeding £5, or in the case of a second offence £10; and any contract, bargain, sale, or dealing made by the same shall be void, and the weight, measure, scale, balance, or steelyard shall be liable to be forfeited.

The term "weighing machine" includes all "weighing instruments" by sect. 35 of Act of 1889. By sects. 3 and 4 of the Act of 1889, the penalty for a second or subsequent offence has been increased to £20, and imprisonment may be imposed in the case of any offence, if the court be of opinion that the offence was committed with intent to defraud.

The decisions under this section and the similar section of 5 & 6 Will. 4, c. 63, were decisions on questions of fact—viz. whether the instruments in question were false or unjust; they do not decide that devices which were held not unjust in the following cases cannot be prohibited by regulations made by the Board of Trade under the Act of 1904 on the ground that they would "facilitate the perpetration of fraud."

False weigh-bridge.

False or unjust.—A weigh-bridge was so placed that all trucks going to or from a warehouse passed over it. A shower of rain would cause an increase of 11 or 12 lbs. to the weight of the platform, and it was liable to be thrown out of poise by the waggons which passed over it from the main line to the warehouse. The capacity of the machine was 16 tons. The steelyard which was under cover was graduated to indicate every 4 lbs. of the weight. To compensate for derangement from the above causes an adjusting ball, movable on a screw, was affixed to the end of the long arm of the steelyard. The regulations of the company required that weigh-bridges should be adjusted every morning. As this one was not used daily it became the practice to adjust it just before weighing, as it might, owing to the weather, become inaccurate after adjustment in the morning. An inspector on visiting it found that it required 21 lbs. on the platform to bring it to balance. Then an iron bar was passed round the frame to free the platform, an adjustment of the ball was made by one of the company's servants, the 21 lbs. were removed and the weigh-bridge was found to balance. Evidence was given by another inspector that he would consider a machine of that capacity correct if it weighed within 40 lbs. It was also proved that, up to the time of hearing, the weigh-bridge weighed correctly when the adjusting ball was properly used. *Held*, that as the adjusting ball was for the purpose of correcting error due to the weather before weighing, the machine was not incorrect for the purpose of weighing, merely because it was not properly tested by first adjusting the ball: *L. & N. W. Rly. Co.* v. *Richards*, 2 B. & S. 326;

All. 30. This case was distinguished from the two following noted below by the judges in *Carr* v. *Stringer* (below), on the ground that the adjusting ball was an integral part of the machine intended for the purpose of adjusting and compensating for changes caused by the atmosphere before using the machine. [This case was decided in 1862 under a section similar to this. But now the limits of permissible adjustment are laid down by Regulations of the Board of Trade, and either party may require the Court to refer the question of the efficiency of such a machine to the Board of Trade under sect. 7 (2) of the Act of 1904, *post*, p. 244.] Sect. 25.

But an instrument used for weighing excess luggage which worked with a spring and dial to indicate the weight, and which through being out of order indicated 4 lbs. against the passenger, was held to be an unjust weighing instrument, although the error was allowed for when the instrument was used: *Great Western Railway Company* v. *Bailie*, 5 B. & S. 928; 34 L. J. M. C. 31. Unjust contrivances.

A shopkeeper used scales which were correct as to balance; he attached to the weight end a hollow brass ball, removable, and constructed with a lid which could be unscrewed so as to allow shot to be placed inside. On removing the shot and replacing the ball the scale was against the purchaser.—*Held*, that there was evidence from which the magistrate might convict the defendant of having used an unjust balance: *Carr* v. *Stringer*, L. R. 3 Q. B. 433; 37 L. J. M. C. 120.

A coal merchant, in using a machine which was correct in itself, put on one scale a contrivance known as a barrow, for the purpose of more easily lifting the sack after it was weighed. The barrow and sack together weighed 7 lbs. To compensate these, a 7-lb. weight was put on the opposite scale. The purchaser knew of the use of the barrow and what weight to allow for it. He assented to this mode of weighing, and was satisfied that he got full weight. The barrow was no part of the machine.—*Held*, that the instrument being correct in itself, the use of the barrow with the purchaser's knowledge and consent did not make it unjust: *Withal* v. *Francis*, 42 J. P. 612.

A tea merchant placed under the scoop of a weighing machine a piece of paper. The effect of this was to make the machine indicate a weight exceeding by the weight of the paper the weight of the tea in the scoop. This was an unjust machine: *Lane* v. *Rendall*, 1899, 2 Q. B. 673; All. 145.

Where the machine is unjust by means of a paper bag underneath the scoop, or by means of an equivalent weight attached to the beam by a wire, sect. 25 applies, although the machine is so altered, and being used for the purpose of weighing quantities of tea so that the gross weight in each bag will be one pound, and this is done at the customer's request: *L. C. C.* v. *Payne* (No. 1), 1904, 1 K. B. 194. A

Sect. 25.

balance is unjust within this section which does not hang true when there is nothing in either pan, the balance in other respects being in the same condition in which it is actually used during a particular weighing: *L. C. C.* v. *Payne* (No. 2), 1905, 1 K. B. 410.

It was a local custom in a part of Ireland to deduct 4 lbs. from the weight of each live pig bought by weight. In accordance with this custom an accurate 4-lb. weight was suspended by a hook to the weight end of a balance. The magistrates considered this weight to be part of the balance which was just and true without the added weight.—*Held*, that the weighing machine with the 4 lb. attached was false or unjust, and that an offence had been committed against this section: *Collins* v. *Denny*, Q. B. 31 I. L. T. R. 167.

Question for the Court.

Where a machine consists of a centre pan on a vertical spring which weighs correctly when the article is placed in the centre of the pan, but incorrectly when placed a little on one side, it was *held* that the question whether the machine was unjust or not was a question of fact for the justices, and as they had found that the instrument was unjust, the conviction was upheld: *R.* v. *Baxendale*, 44 J. P. 763.

Measures.

Certain fluid measures used for dispensing purposes were verified and stamped as correct by an inspector in Yorkshire. The defendant used them in London. An inspector in London examined them and found them incorrect. The evidence as to accuracy of measurement was conflicting. *Held*, by the Court of Quarter Sessions, that, without determining the question of accuracy, the conviction must be quashed on the ground that the measures bore the inspector's stamp, and there was no evidence that the defendant knew they were inaccurate, or that they were found to be inaccurate while in the defendant's possession: *Whittle* v. *Barnard*, 45 J. P. 97.

Other cases illustrating unjust instruments are noted under sect. 27.

The cases of *Washington* v. *Young*, 5 Ex. 403; *R.* v. *Aulton*, 30 L. J. M. C. 129; and *Booth* v. *Shadgate*, 8 L. R. Q. B. 433, owing to the provisions of this Act being different from those of the older Acts, are no longer authoritative.

Possession.

An oil company employed a man to sell oil from a tank which he drove round to customers' houses. He was given two correct measures for use on his rounds. By fraud he obtained another measure belonging to his employers and bearing their mark. This measure had been laid on one side by them for repair or the like, and was not being used by them. On his rounds he concealed the proper measure and used the abstracted one which he had falsified, in order to defraud his employers of part of the money he received from customers. On returning in the evening he concealed the fraudulent measure. The measures were concealed in the cart on which the tank was carried. The company were convicted for having in their possession an unjust

measure for use in trade and a nominal penalty was imposed on them.—*Held*, on appeal, that in the particular circumstances of the case, as the carman took the measure wrongfully into his own physical possession for purposes of committing a fraud on the customers of his employers for his own benefit and not theirs, the measure was not in the legal possession of the employers. The conviction was quashed: *Anglo American Oil Co.* v. *Manning*, 1908, 1 K. B. 536. Sect. 25.

For the use of Trade.—See sect. 19 for definition of trade. If the conviction does not state that the weights, etc., were "for the use of trade," it is bad; but may be amended under 12 & 13 Vict. c. 45, s. 7, upon proof being given that there had been evidence in the Court below of the use of the weights, etc., for trade purposes: *Whittle* v. *Barnard*, 45 J. P. 97. Use for trade.

It does not appear that weighing instruments, weights, or measures are "in use for trade" so long as they remain the manufacturer's property and on his premises for the purpose of being sold to customers.

A farmer sold milk to a dairyman in London. The milk was conveyed in his own churns by rail to the purchaser. The contract to carry with the railway company provided that the churns should be fitted with gauges to indicate the amount of their contents; and by his contract with the purchaser the latter was entitled to have the churns regauged when necessary. The churns were incorrect.—*Held*, by the Queen's Bench Divisional Court, that the churns were measures for use in the trade. The conviction was upheld: *Harris* v. *London, C. C.*, 3 M. R. 58; All. 109. Churns.

Cases relating to instruments used in trade occur under various sections, and are collected in the index under "Use for trade."

Those weighing appliances which are the property of the Postmaster-General and supplied to post-offices are not within the provisions of the Weights and Measures Acts, although used by the possessor for selling goods in his shop: *R.* v. *Kent*, JJ. 24 Q. B. D. 181. In this case the question before the Court was, whether the scales and weights were liable to the jurisdiction of the inspector to determine the question of their justness. The question of *fraudulent use* is a different one, and was not before the Court. Proceedings might have been taken under 6 & 7 Will. 4, c. 37, s. 6, the trader being a baker (see argument of the Attorney-General at p. 183 of above report). Post-office scales.

In his judgment Lord Coleridge, C. J., said: "In this case the defendant is not charged with any fraudulent use of these scales and weights, such as might by possibility be a proper matter for the justices to inquire into. That question is not before us." It does not appear from this case that a prosecution for using unstamped weights or weighing instruments *in trade* would not succeed.

As to weights, etc., on board ship, see sect. 201 of the Merchant Shipping Act, 1894, *post*, p. 378. Ships.

Fraud in use of weight, etc.

26. Where any fraud is wilfully committed in the using of any weight, measure, scale, balance, steelyard, or weighing machine, the person committing such fraud, and every person party to the fraud, shall be liable to a fine not exceeding £5, or in the case of a second offence £10, and the weight, measure, scale, balance, or steelyard shall be liable to be forfeited.

The term "weighing machine" by sect. 35 of the Act of 1889 (*post*, p. 229) includes any weighing instrument; by sect. 3 of that Act, the maximum penalty for a second offence is increased to £20, and the liability to forfeiture is extended to include weighing instruments; under sect. 4 of that Act imprisonment may be imposed.

Custom of trade.

Evidence of trade usage or custom is admissible on the question as to whether there has been any wilful commission of fraud: *King* v. *Spencer*, 91 L. T. 470; All. 185.

Where a customer asked for 1 lb. of sugar and received a bag of sugar 1 lb. gross weight which had been weighed by a pair of scales properly adjusted, and there was no intention to defraud the customer it was *held* that no offence had been committed against this section: *Stone* v. *Tyler*, 1905, 1 K. B. 290; All. 189.

A grocer in selling tea, sugar, etc., weighed the paper in which it was to be wrapped, with the commodity sold. This custom was known to the buyer. *Held*, that *as the custom of the trade was well known*, no fraud was committed within the meaning of this section: *Harris* v. *Allwood*, 57 J. P. 7. This case was followed in *Fanthorpe* v. *Lewis* (All. 158), in which it was held that selling tea and currants with wrapper (gross weight), or soap that had become light by evaporation, was not an offence against this section. But where bags of unusual and unnecessary weight are supplied by the owner of the business to the salesman, the latter will be guilty of an offence against this section if he weigh the bags with the sugar *knowing* that they are unnecessarily heavy, otherwise not: *Nicholls* v. *Allwood*, 68 J. P. 220; All. 178. But in these cases the balance is unjust and an offence is committed against section 25. *See* notes thereto.

Compare case of *Bridger* v. *Neilson*, noted on p. 351, *post*.

The offence of giving short weight is dealt with under the Merchandise Marks Act (*post*, p. 379), and in Scotland under sect. 430 of the Burgh Police (Scotland) Act, 1892 (*post*, p. 350).

Keeping a publicans' measure partly filled with water, and filling it with spirits on demand and selling the whole contents as if spirits only, is an offence against this section.

Penalty on sale of false weight, measure, balance, etc.

27. A person shall not wilfully or knowingly make or sell, or cause to be made or sold, any false or unjust weight, measure, scale, balance, steelyard, or weighing machine.

Every person who acts in contravention of this section shall be liable to a fine not exceeding £10, or in the case of a second offence £50.

The term "weighing machine" now includes any weighing instrument by sect. 35 of the Act of 1889.

Unjust spring-balance.

In the case of *R.* v. *Baxendale*, 44 J. P. 763, the defendant was convicted under this section, the instrument consisting of a pan and spring being so constructed that it gave incorrect results when the article to be weighed was placed elsewhere than on the middle of the pan.

Interchangeable pans.

In another case, the defendant sold a pair of scales which balanced correctly so long as the scale-pans were left at their respective ends. On inspection it was found that by changing the pans the scales were incorrect. This arose from the fact that the scales were so constructed that the error caused by the difference in the respective distances between the points of suspension and the balancing point was counteracted, when the scale-pans were empty, by the difference in the weights of the scale-pans. The scales were returned and were exchanged for another pair in respect of which the defendant's shopman wrote a guarantee. The second pair were faulty like the first. On an appeal to the Quarter Sessions from a conviction under this section, it was *held*, that there was evidence of the defendant having wilfully and knowingly sold scales which were false or unjust: *Henton* v. *Radford*, 45 J. P. 224; All. 62. The methods by which such devices are most easily detected are set forth, *ante*, pars. 66–71, 84, 90–93. See note on this case, *ante*, p. 40.

Stamping and Verification of Weights and Measures.

Stamping with denomination.

28. Every weight, except where the small size of the weight renders it impracticable, shall have the denomination of such weight stamped on the top or side thereof in legible figures and letters.

Every measure of *length or* capacity shall have the denomination thereof stamped on the outside of such measure in legible figures and letters.

A weight or measure not in conformity with this section shall not be stamped with such stamp of verification under this Act as is hereinafter mentioned.

The words in italics denote the amendment made by sect. 13 of the Act of 1904.

Stamping of verification.

29. Every measure and weight whatsoever used for trade shall be verified and stamped by an inspector with a stamp of verification under this Act.

Every person who uses or has in his possession for use for trade any measure or weight not stamped as required by this section, shall be liable to a fine not exceeding £5, or in the case of a second offence £10, and shall be liable to forfeit the said measure or weight, and any contract, bargain, sale, or dealing made by such measure or weight shall be void.

Stamp worn out.

An inspector proved that he had examined the appellant's weights three times, and had never seen the one in question (a 2-lb. iron weight with a copper plug) before. His assistant proved that he could find no mark of a stamp, and that he had several times seen a 2-lb. weight in the appellant's shop. On the other hand, the appellant's son said that two years previously he had taken the weight with three others to the inspector and saw him stamp them all; that no other 2-lb. weight had ever been used in the shop; and that the inspector had on several previous occasions examined the weight, but had never before complained of the want of a stamp; and that the copper plug on which the stamp was impressed, being higher than the iron, had worn away. This evidence was supported by that of the shopman. *Held*, by the Court of Common Pleas, that there was no necessity under the statute (5 & 6 Will. 4, c. 63, s. 21) that the weight should have been re-stamped. The Court also intimated that unless the magistrates disbelieved the appellant's witnesses, they should have dismissed the information: *Starr* v. *Stringer*, L. R. 7 C. P. 383. The above case was decided under a statute now repealed. It is here submitted that this section is substantially the same as regards the point here in question.

It is no defence to a prosecution by the local authority under this section to say that they had not provided means for having such verified under sect. 44: *Hayley* v. *Taylor*, 82 L. T. 803; All. 154.

The conditions under which stamps may be obliterated are regulated by the Board of Trade Regulations: 4 Edw. VII. c. 28, s. 5 (*b*), *post*, p. 240.

Poor-Law Guardians contracted with a baker to supply loaves for paupers. The baker guessed the quantity required from that used the previous week. He brought the loaves in a cart to a cottage hired by the guardians, where the relieving officer tested the weight of the loaves with a weight which was unstamped and which was the property of the guardians. *Held*, that the relieving officer was properly convicted under 5 & 6 Will. 4, c. 63, s. 21, of using an unstamped weight. But that section was narrower than this and the Court expressed the opinion that the prosecution should never have been brought, as it was an extreme case: *Painter* v. *Seers*, 40 J. P. 549. See *Horder* v. *Roberts*, noted, *ante*, p. 153. Checking bread.

Casks used for selling liquor by *wholesale*, if purporting to contain a certain number of gallons, or other quantity in terms of imperial standards, come within the provisions of this section, unless they are filled by means of separate stamped measures; in that case they would come within the exception in sect. 22 above. Intoxicating liquors.

In the case of *Spencer* v. *Till* (5 M. R. 79; All. 135) it was held by the County Court Judge that beer barrels were measures, and that the plaintiff could not recover the price of beer supplied which had been sold by unstamped barrel measure only.

The Board of Trade [see *Monthly Review*, vol. iii. p. 73] regard beer casks as coming within the exception in sect. 22 "in the *absence* of any permanent representation upon the cask itself by way of marking *or otherwise* of its capacity, or of the measure of its contents." But they regard it as inadvisable for the local authorities to press the question because, (1) it has not been done hitherto; (2) there is another remedy against brewers for delivering short weight under the Merchandise Marks Act, 1887 (*Budd* v. *Lucas*, 1891, 1 Q. B. 413); and (3) that the necessary standards have not been made by Order in Council or provided by the Board of Trade. The first reason, if valid, would apply to many other measures and weights in use for trade; the second would nullify many other provisions of this Act. The answer to the third is that it is the duty of the Board of Trade to provide the necessary standards. Besides all these, there is a substantial reason for not stamping them as measures:—that, owing to alterations by repair or use in the capacities of casks, they would "facilitate the perpetration of fraud." Beer casks.

In the *Monthly Review* (vol. v. p. 12) will be found an account of the successful prosecution of a brewer's manager for using beer barrels of short measure. The subject is also discussed there in vol. vii. p. 31, and vol. viii. p. 89.

It appears that instruments for measuring water which act by automatically filling and refilling any receptacle, such as by a cylinder and piston, etc., are "measures" within the Acts; but it is doubtful whether those are included which act by estimating the rate of flow of water in a pipe otherwise than by the above-mentioned means. Water meters.

30. [*Repealed by sect.* 5 *of the Weights and Measures Act*, 1904.]

Stamping of verification on weights for coin.

31. Every coin weight, not less in weight than the weight of the lightest coin for the time being current, shall be verified and stamped by the Board of Trade with a mark of verification under this Act, and otherwise shall not be deemed a just weight for determining the weight of gold and silver coin of the realm.

Every person who uses any weight declared by this section not to be a just weight shall be liable to a fine not exceeding £50.

It appears that this section does not apply to weights used by bankers to avoid the necessity of counting coins, since sums of money are in reality paid by so many coins and not by weight. From the definition of "coin weight" in sect. 70 and from the last par. of sect. 8, it seems that the kind of weights meant are those used for testing the lightness of coins.

Forgery, etc., of stamps on measures or weights.

32. If any person forges or counterfeits any stamp used for the stamping under this Act of any measure or weight, or used before the commencement of this Act for the stamping of any measure or weight, under any enactment repealed by this Act, or wilfully increases or diminishes a *measure or* weight so stamped, he shall be liable to a fine not exceeding £50.

Any person who knowingly uses, sells, utters, disposes of, or exposes for sale any measure or weight with such forged or counterfeit stamp thereon, or a *measure or* weight so increased or diminished, shall be liable to a fine not exceeding £10.

All measures and weights with any such forged or counterfeit stamp shall be forfeited.

By sect. 1 (4) of the Act of 1889, this section was extended to apply to weighing instruments as it then (1889) applied to weights *and* measures. It must therefore be read to apply to weighing instruments as far as the language will allow, that is as regards the forging of

stamps or selling, etc., a weighing instrument with a forged stamp thereon. *See* note to sect. 10 of the Act of 1904, *post*, p. 247.

By sect. 10 (1) of the Act of 1904 (*post*, p. 246) removing a stamp from a weight, etc., and inserting it in another is forgery. The effect of sect. 10 (2) of the Act of 1904 is shown by the words in italics inserted in the above section.

The forfeiture of measures, weights, or weighing instruments having forged stamps on them is compulsory and not in the discretion of the justices.

It appears that it is putting a wrong interpretation on this section to maintain that it is an offence to *adjust* a weight that has become light through wear merely.

The alteration of measures after they have been stamped for total capacity by the insertion of a metal slip containing marked sub-divisions is an offence against this section, as each sub-division is a separate measure.

II.—Administration.

(a) *Central.*

Board of Trade.

Powers and duties of Board of Trade.

33. The Board of Trade shall have all such powers and perform all such duties relative to standards of measure and weight, and to weights and measures, as are by any Act or otherwise vested in or imposed on the Treasury, or the Comptroller-General of the Exchequer, or the Warden of the Standards; and all things done by the Board of Trade, or any of their officers, or at their office, in relation to standards of weights and measures in pursuance of this Act shall be as valid, and have the like effect and consequences, as if the same had been done by the Treasury, or by the Comptroller-General or other officer of the Exchequer, or by the Warden of the Standards, or at the office of the Exchequer.

It shall be the duty of the Board of Trade to conduct all such comparisons, verifications, and other operations with reference to standards of measure and weight, in aid

of scientific researches or otherwise, as the Board of Trade from time to time thinks expedient, and to make from time to time a report to Parliament on their proceedings and business under this Act.

These reports are annually presented to Parliament in the month of August, but are not on sale till the following year.

Custody and Verification of Standards and Copies.

Custody of standards to remain with Board of Trade.

34. The imperial standards of measure and weight, the Board of Trade standards of measure and weight, and all balances, apparatus, books, documents and things used in connection therewith or relating thereto, deposited at the passing of this Act in the Standards Department, or in any other office of the Board of Trade, shall remain and be in the custody of the Board of Trade.

Custody and periodical verification of parliamentary copies of imperial standards.

35. The parliamentary copies of the imperial standards of measure and weight mentioned in part two of the First Schedule to this Act shall continue to be deposited as therein mentioned.

The copies of the imperial standards of measure and weight made in pursuance of this Act, when approved by Her Majesty in Council, shall be deposited at some office of the Board of Trade, and be in the custody of the Board of Trade.

The Board of Trade shall cause the parliamentary copies of the imperial standards of measure and weight, except the copy immured in the new palace at Westminster, to be compared once in every 10 years with each other, and once in every 20 years with the imperial standards of measure and weight.

The results of the last comparison are given in the Annual Report for 1902. The greatest difference in the case of a yard was 96 millionths of an inch, and in the case of a pound was 509 hundred-thousandths of a grain.

36. Once at least in every 5 years the Board of Trade shall cause the Board of Trade standards for the time being to be compared with the parliamentary copies of the imperial standards of measure and weight made and approved in pursuance of this Act and with each other, and to be adjusted or renewed, if requisite.

Periodical verification of Board of Trade standards.

See *Hill* v. *Hennigan*, noted on p. 168, *post.*

37. The Board of Trade shall cause to be compared with the Board of Trade standards and verified at such place as the Board of Trade in each case direct, all copies of any of those standards which are submitted for the purpose by any local authority, and have been used or are intended to be used as local standards, and if they find the same fit for the purpose of being used by inspectors of weights and measures under this Act as standards for the verification and inspection of weights and measures, shall cause them to be stamped as verified or re-verified in such manner as to show the date of such verification or re-verification, and every such verification shall be evidenced by an indenture, and every such re-verification shall be evidenced by an indorsement upon the original indenture of verification, or by a new indenture of verification.

Verification by Board of Trade of local standards.

Any such indenture or indorsement, if purporting to be signed (either before or after the passing of this Act) by an officer of the Board of Trade, shall be evidence of the verification or re-verification of the weights and measures therein referred to.

Any such indenture or indorsement shall not be liable to stamp duty, nor shall any fee be payable on the verification or re-verification of any local standard.

An account shall be kept by the Board of Trade of all local standards verified or re-verified.

By this section the Board of Trade must verify and stamp, if correct, all local standards brought to them for the purpose. If the local authorities require standards of measures or weights other than those mentioned in sched. 2 of this Act, it appears, on one construction of this Act, to be the duty of the Board of Trade to provide the necessary standards under the power given in sect. 8. The local authorities are the proper authorities to decide what weights and measures are required for purposes of trade in their respective districts: see sect. 40 below.

38. [*Verification of Metric Weights and Measures. Repealed by* 60 *&* 61 *Vict.* c. 46, s. 2 (2).]

Metric weights and measures are now verified and stamped for use in trade under the same conditions as British, under this Act: see sect. 8, *ante*, p. 146.

Verification and stamping of coin weights.

39. The Board of Trade, on payment of such fee, not exceeding 5*s.*, as they from time to time prescribe, shall cause all coin weights required by this Act to be verified, to be compared with the standard weights for weighing coin, and, if found to be just, stamped with a mark approved of by the Board, and notified in the *London Gazette*.

All fees under this section shall be paid into the Exchequer.

This provision shows that "coin" weights are those used for testing the lightness of coin, and not those used by cashiers merely as a check on their counting.

The fees prescribed by the Board of Trade (26th July, 1879) under this section are as follows:—For each weight from five pound to a farthing the fee for verification is 6*d.* These weights are—five pound, two pound, sovereign, half-sovereign, crown, half-crown, florin, shilling, sixpence, fourpence, threepence, twopence (silver), penny (silver), penny (bronze), halfpenny, and farthing. For each complete dozen of sovereign weights under twelve dozen the fee is 5*s.*; for each complete gross of sovereign weights the fee is £2 10*s.*; and it is the same for half-sovereign weights.

(b) *Local Administration.*

Local Standards.

Local authority to provide

40. The local authority (mentioned in the Fourth Schedule to this Act) of every county and borough from

time to time shall provide such local standards of measure and weight as they deem requisite for the purpose of the comparison by way of verification or inspection, in accordance with this Act, of all weights and measures in use in their county or borough, and shall fix the places at which such standards are to be deposited. Local standards.

The said local authority shall also provide from time to time proper means for verifying weights and measures by comparison with the local standards of such authority and for stamping the weights and measures so verified.

This enactment is general. By sect. 19 (*ante*, p. 149) any weight or measure that is a *multiple* or *aliquot part* of a standard is a legal one; hence, on one construction of the Act (*ante*, p. 146), it would become the duty of the local authorities to provide standards for such measures as $\frac{1}{3}$rd gill for spirits, $\frac{1}{3}$rd quart for beer, $\frac{1}{5}$th quart for milk (each being an aliquot part of the standard gallon), and so on if required by the tradesmen within their jurisdiction, and to apply to the Board of Trade to have them verified. There is nothing in the Act to authorize the prosecution of tradesmen for having such measures unstamped merely with a view to put pressure on the latter to apply to the Board of Trade.

For amended meaning of "local authority," see *post*, p. 207.

41. A local standard of weight shall not be deemed legal nor be used for the purposes of this Act unless it has been verified or re-verified within 5 years before the time at which it is used. Periodical verification of local standards.

A local standard of measure shall not be deemed legal nor be used for the purposes of this Act unless it has been verified or re-verified within 10 years before the time at which it is used.

A local standard of weight or measure which has become defective in consequence of any wear or accident, or has been mended, shall not be legal nor be used for the purpose of this Act until it has been re-verified by the Board of Trade.

A local standard may, save as aforesaid, be re-verified,

for the purpose of this section, by such local comparison thereof as is hereinafter mentioned, if on that local comparison it is found correct, but otherwise shall be, and in any case may be, re-verified by the Board of Trade.

A local comparison of a local standard shall be made by an inspector of weights and measures for the county or borough in which such standard is used comparing the same, in the presence of a justice of the peace, with some other local standard which has been verified or re-verified by the Board of Trade, in the case of a weight within the previous 5 years, and in the case of a measure within the previous 10 years.

Upon a local comparison where the local standard is found correct the justice shall sign an indorsement upon the indenture of verification of that standard, stating such local comparison and verification, and the error, if any, found thereon and the indorsement so signed shall be transmitted to the Board of Trade to be recorded in the account of the verification of local standards. The indorsement when so recorded shall be evidence of the local comparison and verification, and a statement of the record thereof, if purporting to be signed by an officer of the Board of Trade, shall be evidence of the same having been so recorded.

It shall be lawful for Her Majesty from time to time, by Order in Council, to define the amount of error to be tolerated in local standards when verified or re-verified by the Board of Trade, or when re-verified by such a local comparison as is authorized by this section.

The amounts of error allowed by *O.* in *C.* under this section is given, *post*, p. 397.

It is unnecessary in a prosecution in respect of weights to prove that the county standard has been compared within five years with the imperial or Board of Trade standards. The presumption is that the

comparison has been duly made, and it lies on the defendant to rebut it: *Hill* v. *Hennigan*, I. R. 11 C. L. 522.

Production of local standards.

42. The local standards shall be produced by the person having the custody thereof, upon reasonable notice, at such reasonable time and place within the county, borough, or place for which the same have been provided, as any person by writing under his hand requires, upon payment by the person requiring such production of the reasonable charges of producing the same.

The history of legislation and of this section shows that it appears not to apply to the verification and stamping required by sect. 44.

Formerly (1824) under 5 Geo. 4, c. 74, s. 12, local models or copies of imperial standards were deposited with the justices for the purposes of reference in cases of dispute, there was no compulsory verification or stamping of trade measures; if there were no standard measures the justices were by sect. 14 empowered to settle disputes by testing the measure in question by weighing rain-water therein at a temperature of 62° F. The provision in the above section is taken from sect. 12 of that Act, the tradesmen having to pay for the services rendered him, in producing the copy standards for his use. It appears, therefore, that this section does not apply to the verification and stamping required by sect. 44.

Local Verification and Inspection.

Appointment of inspectors.

43. Every local authority shall from time to time appoint a sufficient number of inspectors of weights and measures for safely keeping the local standards provided by such authority, and for the discharge of the other duties of inspectors under this Act; . . . and the local authority may suspend or dismiss any inspector appointed by them or appoint additional inspectors, as occasion may require, and shall assign reasonable remuneration to each inspector for his duties.

A local authority may, if they think fit, appoint different persons to be inspectors for verification and for inspection respectively of weights and measures under this Act.

Security required.

An inspector of weights and measures shall forthwith on his appointment enter into a recognizance to the Crown (to be sued for in any Court of Record) in the sum of £200 for the due performance of the duties of his office, and for the due payment, at the times fixed by the local authority appointing him, of all fees received by him under this Act, and for the safety of the local standards and the stamps and appliances for verification committed to his charge, and for their due surrender immediately on his removal or other cessation from office to the person appointed by the local authority to receive them.

The passages omitted in this section have been repealed by the Acts of 1904 and 1889, respectively.

It is the inspector and not a committee of the local authority on whom the responsibility of administering the Act ultimately rests.

The form of recognizance is given, *post*, p. 394.

Fees received for verification, etc., under this Act by a police officer who is also an inspector under this Act, are not received by him in his capacity of constable, and the disposal of them is governed by this and not the local Act governing such police: *R.* v. *Kisteven*, JJ. 58 L. J. M. C. 157; All. 77.

Verification and stamping by inspectors.

44. The local authority shall from time to time fix the times and places within their jurisdiction at which each inspector appointed by them is to attend for the purpose of the verification of weights and measures; and the inspector shall attend, with the local standards in his custody, at each time and place fixed, and shall examine every measure or weight which is of the same denomination as one of such standards and is brought to him for the purpose of verification, and compare the same with that standard, and if he find the same correct shall stamp it with a stamp of verification in such manner as best to prevent fraud; and in the case of a measure or of a weight of a quarter of a pound or upwards, shall further stamp thereon a name, number, or mark distinguishing the district for which he acts.

He shall also enter in a book kept by him minutes of every such verification, and give if required a certificate under his hand of every such stamp.

In another's district.

An inspector appointed by the local authority for a county may enter a place within the district of an inspector appointed by any other local authority, and there verify and stamp the weights and measures of any person residing within his own district, but if he knowingly stamp a weight or measure of any person residing in the district of an inspector legally appointed by another local authority, he shall be liable to a fine not exceeding 20*s.* for every weight or measure which he so stamps.

This section does not authorize the re-stamping of any article so long as it remains just: see case of *Starr* v. *Stringer*, noted *ante*, p. 160.

This section deals only with verification of new weights and measures. It does not apply to weights or measures already verified and used in trade. The verification of weights, measures, and weighing and measuring instruments in use for trade is governed by sect. 5 of the Act of 1904, *post*, p. 240.

This section is applied to the verification and stamping in accordance with the Board of Trade regulations of weighing instruments by sect. 12 of the Act of 1904, *post*, p. 247, and in such cases any person having his principal place of business within any district is to be deemed to reside in that district.

Where the inspector is not provided with the necessary standards he is justified in refusing to verify and stamp if the weight or measure brought to him is not of the denomination of a standard in his possession. If he stamp by comparing with two or more standards he commits an offence against this section, but probably would only incur a nominal penalty. A trader who submitted the article in the former case would commit an offence on using the unstamped articles in trade.

Recovery of fees for bad work.

W. suspecting D. was in the habit of stamping unjust machines, brought him one to verify, although D. was not the inspector for the district in which W. lived. D. stamped the unjust balance. W. prosecuted D. for misconduct, but the charge was dismissed. W. then sued D. for recovery of the fees paid to D. in accordance with the Act. The County Court judge held that W. could not recover, having paid the money with full knowledge of the facts and having "entrapped" B. On an appeal to the Queen's Bench Divisional Court it was held that

the County Court judge was wrong, and W. could recover the fees so paid, although D. had paid them over to the local authority: *Wedderburn* v. *Davis*, June 11, 1891. (Unreported; noted by the author in court at the hearing.)

The last paragraph of this section re-enacts sect. 25 of 5 & 6 Will. 4, c. 63, but in an amended form. The prohibition in the last five lines of this section is directed against the abuse by an inspector of the powers given in the lines immediately preceding: the case of *R.* v. *Skelton*, 28 L. J. M. C. 222, is therefore, owing to the alteration in the section, no longer applicable.

Stamped weight, etc., valid throughout the Kingdom.

45. A weight or measure duly stamped by an inspector under this Act shall be a legal weight or measure throughout the United Kingdom, unless found to be false or unjust, and shall not be liable to be re-stamped because used in any place other than that in which it was originally stamped.

Re-stamping unnecessary.

Sect. 14 of 4 & 5 Will. 4, c. 49 (the Act of 1834), in order to stop the use of illegal local measures, provided that there should be a particular stamp for each county, and that no weight or measure should be legal unless bearing the stamp of the county in which it was used. This decentralization was found unworkable, and consequently in the following year (1835) the prohibition was removed by sect. 27 of 5 & 6 Will. 4, c. 63, which provided that all weights or measures stamped under the provisions for the former section should, without being re-stamped, be legal throughout the United Kingdom. Hence the weights and measures which, being stamped under the former Act, were illegal outside their respective counties of stamping, were by the latter Act declared legal without restamping. When the latter Act was embodied in the present Act (1878), the original legalized weights had, by lapse of time, gone out of use. The above section is a reproduction of sect. 27 of the Act of 1835, and as the original prohibition of the Act of 1834 has been repealed, this section is simply a declaratory one, for there is now no prohibition to the trader to exercise his right at common law to use his weights in any part of the kingdom.

This section has been extended to apply to weighing instruments by s. 15 of the Act of 1904, *post*, p. 249; but there never was any prohibition to their use in any district other than that in which they were stamped.*

* This view, expressed in the first edition of this work (1891), was adopted by the Law Officers in 1900.

46. [*Power to stamp measures made partly of metal and partly of glass. Repealed by the Act of* 1889.]

47. [*Fees. Repealed by the Act of* 1889. *Others substituted.*]

Power to inspect, etc., and to enter shops, etc.

48. Every inspector under this Act authorized in writing under the hand of a justice of the peace, also every justice of the peace, may at all reasonable times inspect all weights, measures, scales, balances, steelyards, and weighing machines within his jurisdiction which are used or in the possession of any person or on any premises for use for trade, and may compare every such weight and measure with some local standard, and may seize and detain any weight, measure, scale, balance, or steelyard which is liable to be forfeited in pursuance of this Act, and may for the purpose of such inspection enter any place, whether a building or in the open air, whether open or enclosed, where he has reasonable cause to believe that there is any weight, measure, scale, balance, steelyard, or weighing machine which he is authorized by this Act to inspect.

Any person who neglects or refuses to produce for such inspection all weights, measures, scales, balances, steelyards, and weighing machines in his possession or on his premises, or refuses to permit the justice or inspector to examine the same or any of them, or obstructs the entry of the justice or inspector under this section, or otherwise obstructs or hinders a justice or inspector acting under this section, shall be liable to a fine not exceeding £5, or in the case of a second offence £10.

Inspectors acting under this section should always have their warrants with them, and produce them when required by the occupier of the premises.

In the case of verification (sect. 44, *ante*, p. 170), the standard used must be of the same denomination as the article verified; it need not be so in the case of inspection under this section.

The term "weighing machine," by sect. 35 of the Act of 1889, includes all weighing instruments as defined by that Act.

What is "in possession"?

A dairy farmer had been convicted of having false measures. On two occasions an inspector called at the dairy, and found a labouring man in charge of the premises in the temporary absence of his master. The man refused to leave his work to get the measures asked for. There was no evidence as to the terms of employment of the man in charge.—*Held*, that there was no evidence that the man was "in possession" of the measures at all: *Smith* v. *Webb*, 4 M. R. 180, 60 J. P. 517.

An inspector who has a general warrant from a justice under this section, may, by virtue of such appointment and warrant, enter at all reasonable times any place, etc., without having a special warrant in each particular case: *Hutchings* v. *Reeves*, 9 M. & W. 747, decided under similar words in sect. 28 of the Act of 1835, 5 & 6 Will. 4, c. 63.

The other provisions of this section are much wider than the corresponding ones of sect. 28 of the Act of 1835; consequently, the cases of *Kershaw* v. *Johnson*, 1 C. & K. 329, and *Wray* v. *Reynolds*, 1 E. & E. 165, are no longer in point. For a similar reason the cases of *Thomas* v. *Stevenson*, 2 E. & B. 108, and *Griffiths* v. *Place*, 20 L. T. 484, do not apply to this section.

In the application of this section in the case of mines, see sect. 15 (4) of the Coal Mines Regulation Act, 1887, 50 & 51 Vict. c. 58, *post*, p. 329.

Penalty on inspector for misconduct.

49. If an inspector under this Act stamps a weight or measure in contravention of any provision of this Act, or without duly verifying the same by comparison with a local standard, or is guilty of a breach of any duty imposed on him by this Act, or otherwise misconducts himself in the execution of his office, he shall be liable to a fine not exceeding £5 for each offence.

If an inspector refuses or wilfully neglects to comply with the Board of Trade Regulations he will be guilty of an offence against this section: 4 Edw. 7, c. 28, s. 5 (4).

An inspector ascertained that weights carried on a coal cart for the purpose of weighing coal were unjust. He defaced the stamps on them, and returned them to the dealer but with no proceedings against him. He also ascertained (but not by comparison with a local standard) that the weighing machine was unjust and thereupon seized it.—*Held*, that the justices were right in dismissing the information against the inspector for alleged misconduct: *Wedderburn* v. *Smith*, 69 J. P. 217.

See *Wedderburn* v. *Davis*, noted *ante*, p. 171.

Local Authorities.

50. For the purposes of this Act "the local authority" and "the local rate" shall mean in each of the different areas mentioned in the first column of the Fourth Schedule to this Act the authority and the rate or fund mentioned in that schedule in connection with that area: Local authorities and local rates.

Provided that in England the council of a borough which has not a separate court of quarter sessions shall not, unless they so resolve, be the local authority for the purposes of this Act, and if they so resolve and provide local standards and appoint inspectors after the commencement of this Act, they shall forthwith give notice of such resolution and appointment, under the corporate seal of the borough, to the clerk of the peace of the county in which the borough is situate, and after the expiration of one month from the day on which that notice of the said appointment is given, the powers of inspectors of weights and measures appointed by the justices of the county shall, as to such borough and the weights and measures of persons residing therein, cease; but until such notice is given the borough shall be deemed to form part of the said county in like manner as if the same were not a borough.

Where at the commencement of this Act legal local standards are provided and inspectors are appointed by the council of a borough not having a separate court of quarter sessions, that council shall continue to be the local authority until they otherwise resolve.

The transfer of powers under the Local Government Acts to the County Councils is noted in the Fourth Schedule.

51. The expense of providing and re-verifying local standards, the salaries of the inspectors, and all other Expenses of local authority.

expenses incurred by the local authority under this Act shall be paid out of the local rate.

The treasurer of the county in which a borough in England having a separate court of quarter sessions is situate shall exclude from the account kept by him of all sums expended out of the county rate to which the borough is liable to contribute all sums expended in pursuance of this Act.

The Weights and Measures Act, 1893 (56 & 57 Vict. c. 19, s. 1), enacts that where the mayor, aldermen, and burgesses of a borough not being a county borough, and not having a separate Court of Quarter Sessions, were on Jan. 1st, 1893, the local authority under the Weights and Measures Acts, or any local Act regulating weights and measures, they should be relieved from contributing to the county expenses under the Weights and Measures Acts.

Power of local authorities to combine.

52. Any two or more local authorities may combine, as regards either the whole or any part of the areas within their jurisdiction, for all or any of the purposes of this Act, upon such terms and in such manner as may be from time to time mutually agreed upon.

An inspector appointed in pursuance of an agreement for such combination shall, subject to the terms of his appointment, have the same authority, jurisdiction, and duties as if he had been appointed by each of the authorities who are parties to such agreement.

53. [*Repealed by s.* 5 *of the Act of* 1904.]

Appointment of inspectors in towns and other places.

54. Where a town or other place has been or may hereafter be authorized under any Act, whether local or otherwise, to appoint inspectors or examiners of weights and measures, or where any other place has been or may hereafter be, by charter, Act of Parliament, or otherwise, possessed of legal jurisdiction, and such town or place is for the time being provided with legal local standards, the magistrates of such town or place, or other persons authorized as aforesaid, may appoint inspectors of weights

and measures within the limits of their jurisdiction, and suspend and dismiss such inspectors, and such inspectors shall within such limits exclusively have the same power and discharge the same duties as inspectors of weights and measures appointed under this Act by the local authority for the county, and shall pay over and account for the fees received by them under this Act, to such persons as may be duly authorized by the magistrates or other persons appointing them.

In the County of London (exclusive of the City of London), the inspectors appointed by the County Council are to be the sole inspectors: 52 & 53 Vict. c. 21, s. 16, *post*, p. 217.

55. [Power of vestry, etc., in metropolis to put an end to appointment of inspectors of weights and measures under local Act.]

This section is superseded by sect. 16 of the Act of 1889, *post*, p. 217.

Legal Proceedings.

Prosecution of offences and recovery of fines.

56. All offences under this Act may be prosecuted and all fines and forfeitures under this Act may be recovered on summary conviction before a court of summary jurisdiction in manner provided by the Summary Jurisdiction Act.

The court when hearing and determining an information or complaint under this Act shall be constituted either of two or more justices of the peace in petty sessions sitting at a place appointed for holding petty sessions, or of some magistrate or officer sitting alone or with others at some court or other place appointed for the administration of justice and for the time being empowered by law to do alone any act authorized to be done by more than one justice of the peace.

Penalties when recovered in a Metropolitan Police Court are payable to the Receiver for the Metropolitan Police District under 2 & 3 Vict. c. 71, s. 47.

Justices for the County of London, when sitting in their usual court, although within the district of a Police Court, form a court of summary jurisdiction, and can hear cases under the Weights and Measures Acts, notwithstanding the provisions of the Metropolitan Police Acts, which prohibit the taking of court fees (*Dodson* v. *Williams*, 2 M. R. 295); but, inasmuch as the Metropolitan Police Courts are provided to hear criminal cases, a *mandamus* will not be granted to compel the county justices to exercise their jurisdiction: *The Queen* v. *Young*, 8 T. L. R. 86.

Provisions as to summary proceedings.

57. The following enactments shall apply to proceedings under the Act before a court of summary jurisdiction; (that is to say),

(1) The description of any offence in the words of this Act, or in similar words, shall be sufficient in law [*Repealed as to England by* 47 & 48 *Vict. c.* 43]; and

(2) Any exception, exemption, proviso, excuse, or qualification, whether it does or does not accompany in the same section the description of the offence, may be proved by the defendant, but need not be specified or negatived in the information or complaint, and, if so specified or negatived, no proof in relation to the matter so specified or negatived shall be required on the part of the informant or complainant [*Repealed as to England by* 47 & 48 *Vict. c.* 43]; and

(3) A warrant of commitment shall not be held void by reason of any defect therein, if it be therein alleged that the offender has been convicted, and there is a good and valid conviction to sustain the same. [*Repealed as to England by* 47 & 49 *Vict. c.* 43.]

(4) Such portion of any fine under this Act, not exceeding a moiety, as the court of summary jurisdiction before whom a person is convicted think fit to direct, may, if the court in their discretion so order, be paid to the informer *unless such informer is an inspector of weights and measures.*

(5) All weights, measures, scales, balances, and steelyards forfeited under this Act shall be broken up, and the materials thereof may be sold or otherwise disposed of as a court of summary jurisdiction direct; and the proceeds of such sale shall be applied in like manner as fines under this Act.

The words in italics denote the amendment made by sect. 13 of the Act of 1904.

Second offences.

58. A person shall not be liable to any increased penalty for a second offence under any section of this Act, unless that offence was committed after a conviction within five years previously for an offence under the same section.

Evidence as to possession.

59. Where any weight, measure, scale, balance, steelyard, or weighing machine is found in the possession of any person carrying on trade within the meaning of this Act, or on the premises of any person which, whether a building or in the open air, whether open or enclosed, are used for trade within the meaning of this Act, such person shall be deemed for the purposes of this Act, until the contrary is proved, to have such weight, measure, scale, balance, steelyard, or weighing machine in his possession for use for trade.

In a Scotch case it was held that the effect of this section was to "remove the *onus* from the prosecutor, putting the presumption in his favour, but not to lay the *onus* on the accused." A magistrate before

convicting must be satisfied that the unjust weights or measures were used or intended to be used for trade. *Hood* v. *Malcolm*, 25 Sc. L. R. 17; All. 76. This decision is not binding in English or Irish courts. See *Anglo-American Oil Co.* v. *Manning*, *ante*, pp. 156, 157.

The Weights and Measures Acts do not apply to weighing appliances which are the property of the Postmaster General, although they are used by postmasters in their shops for the sale of goods: *R.* v. *Kent*, JJ., 24 Q. B. D. 181. Nor do they appear to apply to weights, etc., on board ships, see *post*, p. 378.

Appeal from conviction.

60. Any person who feels himself aggrieved by a conviction or order of a court of summary jurisdiction under this Act may appeal therefrom, subject in England to the conditions following; that is to say,

(1) The appeal shall be made to the next practicable court of general or quarter sessions . . . [*rest of section repealed by* 47 & 48 *Vict. c.* 43].

Action against person acting in execution of Act.

61. In an action for any act done in pursuance or execution or intended execution of this Act, or in respect of any alleged neglect or default in the execution of this Act, tender of amends before the action is commenced may in lieu of or in addition to any other plea be pleaded, if the action was commenced after such tender, or is proceeded with after payment into court of any money in satisfaction of the plaintiff's claim. If the action is commenced after such tender, or is proceeded with after such payment, and the plaintiff does not recover more than the sum tendered or paid respectively, the plaintiff shall not recover any costs incurred after such tender or payment, and the defendant shall be entitled to his costs, to be taxed as between solicitor and client, as from the time of such tender or payment; but this provision shall not affect costs on any injunction in the action.

The insertion of the words "intended execution of this Act" surmounts the difficulty discussed in the case of *Thomas* v. *Stephenson*, 2 E. & B. 108, which is now no longer authoritative.

The provisions of the foregoing section are practically superseded

by the Public Authorities Protection Act, 1893, 56 & 57 Vict. c. 61, which enacts that proceedings against officials who carry out the provisions of any Act of Parliament: (1) must be taken within 6 months; (2) judgment for the defendant to carry costs as between solicitor and client; (3) [re-enacts above section;] and (4) if in the opinion of the court the plaintiff has not given the defendant a sufficient opportunity of tendering amends before proceedings commenced, the court may award the defendant costs as between solicitor and client. This Act does not affect any proceedings by a Government Department against any local authority or officer of a local authority.

III.—Miscellaneous.

Continuance of inquisition recorded for ascertaining rents and tolls payable.

62. Every inquisition which, in pursuance of any Act hereby repealed, has been taken for ascertaining the amount of contracts to be performed or rents to be paid in grain or malt, or in any other commodity or thing, or with reference to the measure or weight of any grain, malt, or other commodity or thing, and the amount of any toll, rate, or duty payable according to any weight or measure in use before the passing of the said Act, and has been enrolled of record in Her Majesty's Court of Exchequer, shall continue in force, and may be given in evidence in any legal proceeding, and the amount ascertained by such inquisition shall, when converted into imperial weights and measures, continue to be the rule of payment in regard to all such contracts, rents, tolls, rates, or duties.

Orders in Council.

63. It shall be lawful for Her Majesty in Council from time to time to make Orders for the purposes of this Act, and to revoke and vary any such Order.

All Orders in Council made under this Act shall be published in the London, Edinburgh, and Dublin Gazettes, and shall be forthwith laid before both Houses of Parliament, and shall have full effect as part of this Act.

Effect of schedules.

64. The schedules to this Act, with the notes thereto, shall be construed and have effect as part of this Act.

Notes to the schedules which are inserted by the author of this book are enclosed in brackets, so as not to be mistaken for those referred to in this section.

Construction of Acts referring to repealed enactments.

65. Where an enactment refers to any Act repealed by this Act, or to any enactment thereof, the same shall be construed to refer to this Act or to the corresponding enactment of this Act.

Savings and Definitions.

Models of gas-holders.

66. Nothing in this Act shall affect the validity of the models of gas-holders verified and deposited in the standards department of the Board of Trade in pursuance of 22 & 23 Vict. c. 66, and of the Acts amending the same, and the provisions of this Act with respect to Board of Trade standards shall apply to such models; and the provision of this Act with respect to defining the amount of error to be tolerated in local standards when verified or re-verified, shall apply to defining the amount of error to be tolerated in such copies of the said models of gas-holders as are provided by any justices, council, commissioners, or other local authority in pursuance of the said Acts.

The provisions of this Act as to the verification and re-verification of local and working standards are applied to standards used for testing gas-meters by sect. 15 of the Act of 1889, *post*, p. 216.

Rights of the Founders' Company.

67. Nothing in this Act shall extend to prohibit, defeat, injure, or lessen the rights granted by charter to the master, wardens, and commonalty of the Mystery of Founders of the city of London.

Sect. 17 of the Act of 1889 (*post*, p. 217) enacts that, notwithstanding this and the next section, a person using weights or measures in the City of London is not required to have his weights or measures stamped by more than one authority.

68. Nothing in this Act shall prohibit, defeat, injure, or lessen the right of the mayor and commonalty and citizens of the city of London, or of the Lord Mayor of the city of London for the time being, with respect to the stamping or sealing of weights and measures, or with respect to the gauging of wine or oil, or other gaugeable liquors. Saving as to London.

See note to the last section.

5 Geo. 4, c. 74, s. 25 enacts that all vessels of wine, oil, honey, and other gaugeable liquors imported and landed within the City of London and its liberties shall be subject and liable to be gauged by the Lord Mayor or officers appointed by him. Vessels found wanting to be forfeited with their contents.

69. Nothing in this Act shall extend to supersede, limit, take away, lessen, or prevent the authority which any person or body politic or corporate, or any person appointed at any court leet for any hundred or manor, or any jury or ward inquest, may have or possess for the examining, regulating, seizing, breaking, or destroying any weights, balances, or measures within their respective jurisdictions, and for the purposes of this section the court of burgesses of the city of Westminster shall be deemed to be a body politic, and nothing in this Act shall be deemed to repeal or supersede the Acts relating to that court, or lessen, diminish, or alter the powers of the same. Act not to abridge the power of the leet jury, etc.

By the Weights and Measures (Purchase) Act, 1892, 55 & 56 Vict. c. 18, powers are given to County and Borough Councils in England and Wales to purchase franchises of weights and measures.

A custom in a manor for the leet jury to break and destroy measures found by them to be false is a lawful custom: *Willcock* v. *Windsor*, 3 B. & Ad. 43.

An annoyance jury of Westminster visited the plaintiff's shop and condemned his scales. It appeared that two only entered the shop, the rest remaining outside near the door and window.—*Held*, that the distress was unjustifiable, as all could not concur in condemnation of the scales: *Holland* v. *Heath*, 2 Jur. 234.

The law governing the inspection of weights and measures by the burgesses of Westminster is governed by 24 & 25 Vict. c. 78.

Appeals from courts leet within the Metropolitan Police District are to the Metropolitan Police Magistrates, and are regulated by 3 & 4 Vict. c. 84, s. 12.

70. In this Act, unless the context otherwise requires,—

"Summary Jurisdiction Act:" The expression "the Summary Jurisdiction Act" means the Act of 11 & 12 Vict. c. 43, inclusive of any Acts amending the same:

"Court of summary jurisdiction:" The expression "court of summary jurisdiction" means any justice or justices of the peace, metropolitan police magistrate, stipendiary or other magistrate or officer, by whatever name called, to whom jurisdiction is given by the Summary Jurisdiction Act or any Acts therein referred to:

"Quarter sessions:" The expression "quarter sessions" includes general sessions:

"Treasury:" The expression "Treasury" means the Commissioners of Her Majesty's Treasury:

"Person:" The expression "person" includes a body corporate:

"Stamping:" The expression "stamping" includes casting, engraving, etching, branding, or otherwise marking, in such manner as to be so far as practicable indelible, and the expression "stamp" and other expressions relating thereto shall be construed accordingly:

"Coin weight:" The expression "coin weight" means a weight used or intended to be used for weighing coin: . . .

The rest of this section was repealed by the Statute Law Revision Act, 1898.

New and enlarged definitions of the Summary Jurisdiction Acts and courts of summary jurisdiction, are given by the Interpretation Act, 1889, 52 & 53 Vict. c. 63, s. 13.

IV.—Application of Act to Scotland.

This Act shall apply to Scotland with the following modifications:

71. In the application of this Act to Scotland, the expression "rents and tolls" includes all stipends, feu duties, customs, casualties, and other demands whatsoever payable in grain, malt, or meal, or any other commodity or thing. Application of imperial weights and measures to tolls, etc.

The fiars prices of all grain in every county shall be struck by the imperial quarter, and all other returns of the prices of grain shall be set forth by the same, without reference to any other measure whatsover.

Any person who acts in contravention of this provision shall be liable to a fine not exceeding £5.

72. All offences under this Act which may be prosecuted, and all fines and forfeitures under this Act which may be recovered on summary conviction, may in Scotland be prosecuted or recovered, with expenses, before the sheriff or sheriff substitute or two or more justices of the peace of the county, or the magistrates of the burgh wherein the offence was committed or the offender resides, at the instance either of the procurator fiscal or of any person who prosecutes. Recovery and application of penalties.

Every person found liable in Scotland in any fine recoverable summarily under this Act shall, failing payment thereof immediate or within a specified time, as the case may be, and expenses, be liable to be imprisoned for a term not exceeding sixty days, and the conviction and warrant may be in the form No. 3 of Schedule K of the Summary Procedure Act, 1864 [27 & 28 Vict. c. 53].

All fines and forfeitures so recovered, subject to any payment made to the informer, shall be paid as follows:

(*a*) To the Queen's and Lord Treasurer's Remembrancer, on behalf of Her Majesty, when the court is the sheriff court:

(*b*) To the collector of county rates, in aid of the county general assessment, when the court is the justice of the peace court:

(*c*) To the treasurer of the burgh, in aid of the funds of the burgh, when the court is a burgh court:

(*d*) To the treasurer of the board of police, or commissioners of police, in aid of the police funds, when the court is a police court.

The term "burgh" now includes "burgh" under the Burgh Police Act, 1892 (see *post*, p. 352).

Appeal.

73. An appeal against a conviction under this Act in Scotland shall be to the Court of Justiciary at the next circuit court, or, where there are no circuit courts, to the High Court of Justiciary at Edinburgh, and not otherwise, and such appeal may be made in the manner and under the rules, limitations, and conditions contained in 22 Geo. 2, c. 43, or as near thereto as circumstances admit; with this variation, that the appellant shall find caution to pay the fine and expenses awarded against him by the conviction or order appealed from, together with any additional expenses awarded by the court dismissing the appeal.

Definitions as regards Scotland.

74. In the application of this Act to Scotland,—

The expression "enter into a recognizance" means grant a bond of caution:

The expression "any court of record" includes the Court of Session and the ordinary sheriff court:

The expression "burgh" shall include royal burgh and parliamentary burgh:

The expression "plaintiff" means pursuer, and the expression "defendant" means defender:

The expression "solicitor" means writer or agent:

The expression "Summary Jurisdiction Act" means the Summary Procedure Act, 1864 [27 & 28 Vict. c. 53], inclusive of any Act amending the same.

Burgh extended to burgh under the Burgh Police Act, 1892: 55 & 56 Vict. c. 55, s. 431 (*post*, p. 352).

For enlarged definition of Summary Jurisdiction Act, see sect. 13 of 52 & 53 Vict. c. 63.

Power of sheriff.

75. A sheriff or sheriff substitute shall have the same power in relation to a local comparison of standards, and to the inspection, comparison, seizure, and detention of weights and measures, and to entry for that purpose, as is given by this Act to a justice of the peace.

V.—Application of Act to Ireland.

The duties of the Grand Juries under this Act have been transferred to the County Councils by the Local Government (Ireland) Act, 1898: 61 & 62 Vict. c. 37, s. 4.

The Act shall apply to Ireland with the following modifications:

Contracts to be made by denominations of imperial weight, otherwise to be void.

76. In Ireland every contract, bargain, sale, or dealing—

For any quantity of corn, grain, pulses, potatoes, hay, straw, flax, roots, carcases of beef or mutton, butter, wool, or dead pigs, sold, delivered, or agreed for;

Or for any quantity of any other commodity sold, delivered, or agreed for by weight (not being a commodity which may by law be sold by the troy ounce or by apothecaries' weight),

shall be made or had by one of the following denominations of imperial weight; namely,

the ounce avoirdupois;
the imperial pound of 16 ounces;
the stone of 14 lbs.;
the quarter hundred of 28 lbs.;
the half hundred of 56 lbs.;
the hundredweight of 112 lbs.; or
the ton of 20 cwt.;

and not by any local and customary denomination of weight whatsoever, otherwise such contract, bargain, sale, or dealing shall be void:

Provided always, that nothing in the present section shall be deemed to prevent the use in any contract, bargain, sale, or dealing of the denomination of the quarter, half, or other aliquot part of the ounce, pound, or other denomination aforesaid, or shall be deemed to extend to any contract, bargain, sale, or dealing relating to standing or growing crops.

From a careful examination of all the cases noted to sect. 19, *ante*, p. 150, it appears that the Act does not apply to any cases where the sale is by bulk or "price" only. This section therefore means that where weight is understood at all, the weights above mentioned must be used, as opposed to customary or local measures. It does not prohibit the sale of (say for illustration) a dead pig for a named price where no reference is made or understood to the weight of the carcase. Such a prohibition would be useless, as the whole price could be agreed on first between the parties and then the rate per pound fixed after weighing, to produce the same total price.

Mode of weighing.

Deductions prohibited.

77. In Ireland every article sold by weight shall, if weighed, be weighed in full net standing beam; and for the purposes of every contract, bargain, sale, or dealing, the weight so ascertained shall be deemed the true weight of the article, and no deduction or allowance for tret or beamage, or on any other account, or under any other name whatsoever, the weight of any sack, vessel, or other covering in which such article may be contained alone

excepted, shall be claimed or made by any purchaser on any pretext whatever, under a penalty not exceeding £5.

A proceeding for the recovery of a penalty under this section shall be begun within three months after the offence is committed.

This section is intended to put an end to certain customs which varied in different localities. It does not prevent the allowing of discount for cash or other similar rebate, so long as the full legal weight is taken into account.

See *Collins* v. *Denny*, noted to sect 25, *ante*, p. 156.

Providing of local standards and sub-standards.

78.—(1) The local authority in Ireland shall provide one complete set of local standards for their county or borough; also so many copies in iron or other sufficient material of the local standards.

(2) The said copies of the local standards when duly verified as hereinafter mentioned shall be the local sub-standards, and shall be used for the verification of weights and measures brought by the public for verification as if they were local standards.

(3) Not less than one set of local sub-standards, and one set of accurate scales, shall be provided for each petty sessions district in a county, and not less than two such sets shall be provided for a borough.

(4) The local authority shall have the local standards from time to time duly compared and re-verified in manner directed by this Act.

(5) The Commissioners of the Dublin Metropolitan Police shall not be under any obligation to provide local standards, but they may, with the assent of the chief secretary or under-secretary to the Lord Lieutenant, procure such

sub-standard scales and stamps as they think necessary for the purposes of this Act in the district for which they are the local authority.

Inquiry by judge of assize and chairman of quarter sessions as to provision of local standards and sub-standards.

79. In Ireland, in every year—

(*a*) in the case of a county, the judge of assize at the first assizes held for the county . . . [*words omitted repealed by* 61 & 62 *Vict. c.* 37, *s.* 79]; and

(*b*) in the case of every borough in a county, the recorder of the borough, or, if there be no recorder, the chairman of the quarter sessions for that county, at the quarter sessions held next after the 25th day of March,

shall inquire whether one complete set of local standards, and a sufficient number of local sub-standards of weights and measures, and a sufficient number of scales and stamps (for verification), have been provided in such county or in such borough.

If it appear to the judge or chairman upon such inquiry that the same have not been so provided, he shall forthwith order the proper officer to provide a complete set of local standards and such sub-standards, scales, and stamps as appear to the judge or chairman making the order to be sufficient for the purposes of this Act, and that order shall have the effect in the case of a county of a presentment on the county for, and in the case of a borough, of an order on the council of the borough to raise by way of rate, the sum necessary to execute the order, and the said officer shall within three months after he receives the order fully execute the same, and in default shall be liable to a fine not exceeding £20.

The proper officer shall, in the case of a county, be the treasurer of the county, and in the case of a borough, the town clerk or other proper officer of the borough.

80. Expenses incurred by any member of the Royal Irish Constabulary as an ex-officio inspector of weights and measures in the execution of this Act shall be payable to such inspector by the person acting as treasurer of the local authority of the district on presentation of accounts of such expenses, to be furnished quarterly certified to be correct by the county inspector of the county. Expenses of ex-officio inspectors.

The secretary of every grand jury being a local authority under this Act shall, at each assizes or presenting term, and the clerk of every other local authority shall once in every year lay before each such grand jury or other local authority an estimate of the sum which may appear to be necessary to meet such expenses until the next assizes or presenting term, or for the ensuing year; and every such grand jury or other local authority shall, without previous application to presentment sessions or other preliminary proceedings, present in advance to the person acting as treasurer the sum specified in such estimate, to be raised and paid out of the local rate; and if the sum so raised proves more than sufficient for the purpose, the balance shall be carried to the credit of the local rate by the person acting as treasurer, and if the sum so raised proves insufficient, the person acting as treasurer shall apply for payment of such expenses any other available funds in his hands.

The duties, etc., of grand juries have been transferred to the County Councils by 61 & 62 Vict. c. 37, s. 4.

81. Nothing in this Act shall authorize the local authority in Ireland, except the local authority of the borough of Dublin, to appoint inspectors of weights and measures, but such head or other constables in each petty sessions district as may be from time to time selected by the inspector-general of constabulary, with the approval Ex-officio inspectors of weights and measures.

of the Lord Lieutenant, shall be ex-officio inspectors of weights and measures under this Act within that district, and shall perform their duties under this Act under the direction of the justices of petty sessions, without fee or reward, and notwithstanding any manorial jurisdiction or claim of jurisdiction within such district:

Provided that if within one month from the date of such selection the justices signify their disapproval of the selection of any head or other constable, another selection shall be made by the same authority, subject to the same conditions, and the inspector-general of constabulary shall within three days after any selection has been made in a petty sessions district, give or cause to be given to the clerk of that district notice of such selection, and the clerk shall immediately make known the said selection to the justices of the district.

An ex-officio inspector of weights and measures may exercise without any authority from a justice of the peace the powers given by this Act to an inspector of weights and measures having such authority.

In the district in which the commissioners of the Dublin Metropolitan Police are the local authority under this Act, such of the superintendents, inspectors, or *acting inspectors of the said police* as may be selected by the local authority with the approval of the Lord Lieutenant shall be ex-officio inspectors of weights and measures within the said district.

This section has been amended by sect. 19 of the Act of 1889 (*post*, p. 217) so as to allow certain townships to appoint their own inspectors, and to allow inspectors who are members of the R. I. C. to take fees; also, the words "acting inspectors" in the last paragraph, are by the same section to be read "sergeants of the Metropolitan Police Force."

Carrying into execution the Board of Trade Regulations is a duty imposed on inspectors by the Act of 1904; as that Act is to be construed as one with this Act and that of 1889, that duty is to be discharged under the direction of the justices.

82. The local standards of every county or borough in Ireland shall be in the custody of such sub-inspector of constabulary as may be from time to time appointed for that county or borough by the inspector-general of constabulary, with the approval of the Lord Lieutenant. Custody and use of local standards.

Such sub-inspector shall, subject to such regulations as the inspector-general of constabulary, with the approval of the Lord Lieutenant, from time to time makes, compare with the local standards in his custody and adjust and verify the local sub-standards sent to him for the purpose, and when the same are correct shall stamp the same with a stamp of verification, and for the purpose of such verification and stamping, and of the verification of local standards, such sub-inspector of constabulary shall be deemed to be an inspector of weights and measures under this Act.

83. The local sub-standards shall be deposited in the custody of the ex-officio inspector of weights and measures, and shall at least once in every year, and also at other times when required by the county inspector of constabulary of the county, or by the justices in petty sessions of the county, be compared with the local standards of the county and verified, and when so verified shall, until the expiration of one year or any shorter period at which the next comparison of the same under this section is made, be deemed to be local sub-standards and be valid local standards for the purpose of the comparison by way of verification or inspection of weights and measures under this Act. Custody and periodical verification of local sub-standards.

The sub-standards provided by the commissioners of the Dublin Metropolitan Police shall be verified by comparison with the local standards of the city of Dublin, as directed by this section, with this qualification, that the said commissioners, and not the county inspector or the

justices, shall have authority to require the same to be verified oftener than once a year.

Any person who uses any sub-standard for any purpose other than that authorized by this Act shall be liable to a fine not exceeding £5.

Recovery of fines, etc.

84. For the purpose of the prosecution of offences and the recovery of fines under this Act, in Ireland,—

(1) The expression "Summary Jurisdiction Acts" in this Act means, within the police district of Dublin metropolis, the Acts regulating the powers and duties of justices of the peace for such district, or of the police of such district, and elsewhere in Ireland the Petty Sessions (Ireland) Act, 1851 [14 & 15 Vict. c. 93], and any Act amending or affecting the same; and

(2) A court of summary jurisdiction when hearing and determining an information or complaint in any matter arising under this Act shall be constituted within the police district of Dublin metropolis of one of the divisional justices of that district sitting at a police court within the district, and elsewhere of a stipendiary magistrate sitting alone, or with others, or of two or more justices of the peace sitting in petty sessions at a place appointed for holding petty sessions; and

(3) Appeals from a court of summary jurisdiction shall lie in the manner and subject to the conditions and regulations prescribed in the twenty-fourth section of the Petty Sessions (Ireland) Act, 1851 [14 & 15 Vict. c. 93], and any Acts amending the same.

The foregoing definitions (1) and (2) are superseded by those in the Interpretation Act, 1889.

85. In this Act, unless the context otherwise requires,— Definitions.

The expression "Lord Lieutenant" means the lieutenant or other chief governor or governors of Ireland for time being:

The expression "treasurer" includes the finance committee and the secretary of the grand jury for the county of Dublin.

The County Council now takes the place of the grand jury; 61 & 62 Vict. c. 37, s. 4.

VI.—Repeal.

86. The Acts mentioned in the first part of the Sixth Schedule to this Act are hereby repealed to the extent in the third column of that schedule mentioned; subject to the following qualification, that is to say, that so much of the said Acts as is set forth in the second part of that schedule shall be re-enacted in manner therein appearing, and shall be in force as if enacted in the body of this Act. Repeal.

Provided that,—

(1) Every inspector appointed in pursuance of any enactment hereby repealed shall continue in office as if he had been appointed in pursuance of this Act; and

(2) Any person holding office as examiner of weights and measures under any enactment repealed by this Act, and not be an inspector of weights and measures within the meaning of this Act, shall continue in office and receive the same remuneration, and have the same powers and duties and be subject to the same liabilities and to the same power of dismissal as if this Act had not passed.

(3) Every notice published in a Gazette in relation to coin weights in pursuance of any enactment hereby repealed shall continue in force.

(4) All weights and measures duly verified and stamped in pursuance of any enactment hereby repealed, shall continue and be as valid as if they had been verified and stamped in pursuance of this Act, and that although such weights or measures could not have been verified and stamped in pursuance of this Act; . . . [*Rest of section repealed by Stat. Law Rev. Act,* 1883.]

The last sub-section makes legal such measures as ⅓rd gill which, in some districts, were stamped under the Acts repealed by this Act, and are still in use.

FIRST SCHEDULE.

[Author's notes are inserted in square brackets.]
[Sects. 4, 10, 13, 65, *ante,* pp. 143, 146, 147, 182.]

PART I.

Imperial Standards.

The following standards were constructed under the direction of the Commissioners of Her Majesty's Treasury, after the destruction of the former imperial standards in the fire at the Houses of Parliament.

The imperial standard for determining the length of the imperial standard yard is a solid square bar, thirty-eight inches long and one inch square in transverse section, the bar being of bronze or gun-metal; near to each end a cylindrical hole is sunk (the distance between the centres of the two holes being thirty-six inches) to the depth of half an inch, at the bottom of this hole is inserted in a smaller hole a gold plug or pin, about one-tenth of an inch in diameter, and upon the surface of this pin there are cut three fine lines at intervals of about the one-hundredth part of an inch transverse to the axis of the bar, and two lines at nearly the same interval parallel to the axis of the bar; the measure of length of the imperial standard yard is given by the interval between the middle transversal line at one end, and the middle transversal line at the other end, the part of each line which is employed being the point midway between the longitudinal lines; and the said points are in this

Act referred to as the centres of the said gold plugs or pins; and such bar is marked "copper 16 oz., tin 2½, zinc 1. Mr. Baily's metal. No. 1. Standard yard at 62°·00 Fahrenheit. Cast in 1845. Troughton & Simms, London."

The imperial standard for determining the weight of the imperial standard pound is of platinum, the form being that of a cylinder nearly 1·35 inch in height and 1·15 inch in diameter, with a groove or channel round it, whose middle is about 0·34 inch below the top of the cylinder, for insertion of the points of the ivory fork by which it is to be lifted; the edges are carefully rounded off, and such standard pound is marked P.S. 1844, 1 lb.

PART II.

[Sects. 5, 35, 64, *ante*, pp. 144, 164, 181.]

Parliamentary Copies of Imperial Standards.

The following copies of the standards above mentioned in part one of this schedule were constructed at the same time as the above standards. They are of the same construction and form as the above standards, and they are respectively marked and deposited as follows:—

(1) One of the copies of the imperial standard for determining the imperial standard yard, being a bronze bar, marked "copper 16 oz., tin 2½, zinc 1. Mr. Baily's metal. No. 2. Standard yard at 61°·94 Fahrenheit. Cast in 1845. Troughton & Simms, London;" and one of the copies of the imperial standard for determining the imperial standard pound marked No. 1, P.C. 1844, 1 lb., have been deposited at the Royal Mint;

(2) One other of the copies of the imperial standard for determining the imperial standard yard being a bronze bar, marked "copper 16 oz., tin 2½, zinc 1. Mr. Baily's metal. No. 3. Standard yard at 62°·10 Fahrenheit. Cast in 1845. Troughton & Simms, London," and one other of the copies of the imperial standard for determining the imperial standard pound marked No. 2, P.C. 1844, 1 lb., have been delivered to the Royal Society of London;

(3) One other of the copies of the imperial standard for determining the imperial standard yard, being a bronze bar, marked "copper 16 oz., tin 2½ zinc 1. Mr. Baily's metal. No. 5. Standard yard at 62°·16 Fahrenheit. Cast in 1845. Troughton & Simms, London," and one other of the copies of the imperial standard for determining the imperial standard pound marked No. 3, P.C. 1844, 1 lb., have been deposited in the Royal Observatory of Greenwich;

(4) The other of the copies of the imperial standard for determining the imperial standard yard, being a bronze bar, marked "copper 16 oz., tin 2½, zinc 1. Mr. Baily's metal. No. 4. Standard yard at 61°·98 Fahrenheit. Cast in 1845. Troughton & Simms, London," and the other of the copies of the imperial standard for determining the imperial standard pound marked No. 4, P.C. 1844, 1 lb., have been immured in the New Palace at Westminster.

SECOND SCHEDULE.

[Author's notes are inserted in square brackets.]
[Sects. 8, 64, *ante*, pp. 144, 181.]

Board of Trade Standards.

Standards of the measures and weights following are at the commencement of this Act in use under the direction of the Board of Trade.

[In this schedule are incorporated new standards and other matter authorized by the following Orders in Council made under the provisions of this Act: (*a*) 4 Feb. 1879; (*b*) 14 Aug. 1879; (*c*) 26 Feb. 1880; (*d*) 28 Apr. 1880; (*e*) 18 May, 1881; (*f*) Aug. 1881; (*h*) 23 Aug. 1883; (*i*) 28 Nov. 1889; (*k*) 22 Nov. 1890; (*l*) 9 Oct. 1903; (*m*) 11 May, 1906; (*n*) 16 Nov. 1906.]

[The Order in Council of 21st Dec., 1907, defines the amounts of error allowed in local standards, and is set out *post*, p. 397.]

MEASURES OF LENGTH.

Standards.

Rod, pole, or perch.

100 ft., and 66 ft. or chain of 100 links, 50 ft. (*n*), 33 ft. or 50 links (*n*), 20 ft. (*n*).

10 ft., 9 ft. (*n*), 8 ft. (*n*), 7 ft. (*n*), 10 links (*n*), 6 ft. or 2 yds., 66 inches (*n*), 54 inches (*n*), 6 ft., and 4 ft., 42 inches (*n*).

3 ft. or 1 yd., 30 inches (*n*), 2 ft., half yard (*d*), and 1 ft.

Quarter yard of 9 ins., one-eighth of a yard, one nail or sixteenth of a yard (*e*), and one inch (divided into 12 duodecimal, 10 decimal, and 16 binary equal parts).

The following standards (Whitworth's gauges) (*h*), whose descriptive numbers are 7/0, 6/0, 5/0, 4/0, 3/0, 2/0, and 0, containing 500, 464, 432, 400, 372, 348, and 324 thousandths of an inch respectively.

Standards (*h*) numbered 1 to 26 containing respectively 300, 276, 252, 232, 212, 192, 176, 160, 144, 128, 116, 104, 92, 80, 72, 64, 56, 48, 40, 36, 32, 28, 24, 22, 20, and 18 thousandths of an inch.

Standards (*h*) numbered 27 to 50 containing respectively 164, 148, 136, 124, 116, 108, 100, 92, 84, 76, 68, 60, 52, 48, 44, 40, 36, 32, 28, 24, 20, 16, 12, and 10 ten-thousandths of an inch.

Standard Gauges (*f*).

(1) Whitworth's External Cylindrical Gauges: External diameters in terms of the inch.

15	gauges	from	0·125 ($\frac{1}{8}$)	to	1 in.	increasing	by	·0625 ($\frac{1}{16}$)	of an in.
24	,,	,,	1·125	,,	4 ,,	,,	,,	·125 ($\frac{1}{8}$)	,,
8	,,	,,	4·25	,,	6 ,,	,,	,,	·25 ($\frac{1}{4}$)	,,
19	,,	,,	0·1	,,	1 ,,	,,	,,	·05	,,
30	,,	,,	1·1	,,	4 ,,	,,	,,	·10	,,
10	,,	,,	4·2	,,	6 ,,	,,	,,	·20	,,

a, *b*, *c*, . . . *l*, *m*, *n*. See note at beginning of schedule.

(2) Same for internal cylindrical gauges. Internal diameters.
(3) External plane gauges. Thickness in terms of an inch 91 gauges from ·01 to ·1 inch increasing by ·001 of an inch.

MEASURES OF CAPACITY.

4 bushels (*c*), 31 gals. down to 9 gals. (*i*), bushel or (*e*) 8 gals., 7 gals. (*i*), 6 gals. (*i*), 5 gals. (*d*), half-bushel or (*e*) 4 gals., 3 gals. (*k*), peck or (*e*) 2 gals., gallon, and half-gallon.

Quart, error.

Pint, and half-pint error.

Gill, half-gill, and quarter-gill.

NOTE.—The brass gallon marked "Imperial Standard Gallon, Anno Domini MDCCCXXIV., Anno V G^IV Regis," which has a diameter equal to its height, and was made in pursuance of 5 Geo. 4, c. 74, s. 6, and is at the passing of this Act in the custody of the Warden of the Standards, shall be deemed to be a Board of Trade standard for the gallon.

[5 Geo. 4, c. 74, fixed the weight of a cubic inch of water weighed under the conditions mentioned in sect. 15 at 252·458 grains. Recent experiments show that the true weight of a cubic inch of distilled water under the same conditions is only 252·286 grains. The brass gallon cannot now be considered accurate. See note to sect. 15, *ante*, p. 148.]

APOTHECARIES' MEASURES (*b*).

Fluid ounces, $\frac{1}{2}$, 1, 2, etc., up to 40; fluid drams, $\frac{1}{2}$, 1, 2, etc., up to 16; minims, 1, 2, etc., up to 60.

1 fluid ounce defined as containing 437·5 grains weight or $\frac{1}{160}$ imperial gallons, 1 fluid dram equals $\frac{1}{8}$ fluid ounce, and 1 minim equals $\frac{1}{60}$ fluid dram.

WEIGHTS.

Denominations of Standards.

AVOIRDUPOIS WEIGHTS.

100 lbs. (central or new hundredweight) (*a*), 56 lbs., or (*e*) half hundredweight; 50 lbs. or half cental (*l*).

28 lbs. or (*e*) quarter hundredweight, and 14 lbs.; 20 lbs. (*m*) and 10 lbs. (*m*).

[See note as to "dram," *post*, p. 205.]

a, *b*, *c*, . . . *l*, *m*, *n*. See note at beginning of schedule.

7 lbs., 4 lbs., and 2 lbs.; 5 lbs. (*m*).
1 lb., 8 ozs. or (*e*) half pound, 4 ozs. or (*e*) quarter pound.
2 ozs., 1 oz., and 8 drs. or half ounce.
4 drs. or quarter ounce, 2 drs., 1 dr., and ½ dr.
240 grs. or 10 dwts., 120 grs. or 5 dwts., 72 grs. or 3 dwts., 48 grs. or 2 dwts., and 24 grs. or 1 dwt.

Troy Bullion Weights.

Ounces and fractions of an ounce.

500, 400, 300, and 200.
100, 50, 40, 30, and 20.
10, 5, 4, 3, and 2.
One ounce, 5, 4, 3, and 2 tenths of an ounce.
One tenth, 5, 4, 3, 2, and 1 hundredths of an ounce.
5, 4, 3, 2, and 1 hundredths of an ounce.

Decimal Grain Weights.

4000, 2000, and 1000 grains.
500, 300, 200, and 100.
50, 30, 20, and 10.
5, 3, 2, and 1.
5, 3, 2, and 1 tenths of a grain.
5, 3, 2, and 1 hundredths of a grain.

Apothecaries' Weights (*b*).

Ounces (1 ounce defined as equal to 480 grains):—
10, 8, and 6.
4, 2, and 1.
Drachms (1 drachm defined as equal to 60 grains):—
4 or half ounce, 2, and 1.
Scruples (1 scruple defined as 20 grains):—
2, 1½ or half a drachm, 1, ½.
Grains:—
10, 6, and 5.
4, 3, and 2.
1 and ½.

a, *b*, *c*, . . . *l*, *m*, *n*. See note at beginning of schedule.

COIN WEIGHTS.

Order in Council, 9th August, 1870.

Denomination of Coin.	Standard of Weight.	
	Imperial Weight.	Metric Weight.
Gold:	Grains.	Grams.
Five pounds	616·37239	39·94028
Two pounds	246·54895	15·97611
Sovereign	123·27447	7·98805
Half-sovereign	61·63723	3·99402
The least current weights are as follows:		
Five pounds	612·5	39·68935
Two pounds	245	15·87574
Sovereign	122·5	7·93787
Half-sovereign	61·125	3·96083
Silver:		
Crown	436·36363	28·27590
Half-crown	218·18181	14·13785
Florin	174·54545	11·31036
Shilling	87·27272	5·65518
Sixpence	43·63636	2·82759
Groat or fourpence	29·09090	1·88506
Threepence	21·81818	1·41379
Twopence	14·54545	0·94253
Penny	7·27272	0·47126
Bronze:		
Penny	145·83333	9·44984
Halfpenny	87·50000	5·66990
Farthing	43·75000	2·83495

[By the new comparison of the British and metric standards it has been found that the British pound is equal to a less number of grams than was formerly thought the case, hence the figures in the second column above are too large. The error in the five-pound piece is ·00018 gram, and in the others ·00007, ·00004, and ·00002 gram respectively. Similarly, the crown and penny are given ·00013 and ·00004 gram too heavy, and so on for the other coins in proportion.]

STANDARDS OF THE METRIC SYSTEM.

[By Order in Council of 19th May, 1898, made in pursuance of sect. 2 of the Weights and Measures (Metric System) Act, 1897, the following standards of the metric system have been verified for use in trade:—]

Denominations of Standards.

MEASURES OF LENGTH.

		20	metres. (*a*)
Dekametre	or	10	metres.
Double metre	or	2	metres.
Metre	or	1000	millimetres.
Decimetre	or	0·1	metre.
Centimetre	or	0·01	metre.
Millimetre	or	0·001	metre.

CUBIC MEASURES.

1000 cubic centimetres.
500 ,, ,,
200 ,, ,,
100 ,, ,,
50 ,, ,,
20 ,, ,,
10 ,, ,,
5 ,, ,,
2 ,, ,,
1 cubic centimetre (1000 cubic millimetres).

MEASURES OF CAPACITY.

20	litres.	0·1	litre (decilitre).
10	litres (dekalitre).	0·05	litre.
5	litres.	0·02	litre.
2	litres.	0·01	litre (centilitre).
1	litre.	0·005	litre.
0·5	litre.	0·002	litre.
0·2	litre.	0·001	litre (millimetre).

WEIGHTS.

20 kilograms.	2 grams.
10 kilograms.	1 gram.
5 kilograms.	5 decigrams ($\frac{1}{2}$ gram).
2 kilograms.	2 decigrams ($\frac{1}{5}$ gram).
1 KILOGRAM (1000 grams).	1 decigram ($\frac{1}{10}$ gram).
500 grams.	5 centigrams ($\frac{1}{20}$ gram).
200 grams.	2 centigrams ($\frac{1}{50}$ gram).
100 grams.	1 centigram.
50 grams.	5 milligrams.
20 grams.	2 milligrams.
10 grams.	1 milligram ($\frac{1}{1000}$ gram).
5 grams.	

(*a*) By Order in Council, 12th Dec., 1904. No name was given to this denomination.

The METRE is represented by the distance marked by two fine lines on the iridio-platinum standard bar numbered 16, when at the temperature of 0° Centigrade. This bar is deposited with the Board of Trade. The metre is the only unit of metric measure of extension from which all other metric measures of extension, whether linear, superficial, or solid, shall be ascertained.

The KILOGRAM is represented by the cylindrical iridio-platinum standard kilogram weight numbered 18, which is deposited with the Board of Trade. The kilogram is the only unit of metric weight from which all other metric weights, and all measures having reference to metric weight, shall be ascertained.

The LITRE is represented by the capacity at 0° Centigrade of the cylindrical brass measure marked "Litre, 1897" (which is deposited with the Board of Trade), and having a diameter equal to one-half its height. This litre at 0° Centigrade when full contains one kilogram of distilled water at the temperature of 4° Centigrade, under an atmospheric pressure equal to that represented by a column of mercury 760 millimetres high at 0° Centigrade, at sea-level, and at latitude 45°; the weighing being made in air, but reduced by calculation to a vacuum. It is the only unit of metric measure of capacity from which all other metric measures of capacity, as well for liquids as for dry goods, shall be ascertained.

[These standards are in addition to those already in the custody of the Board of Trade, and enumerated in Part II. of Schedule III.]

THIRD SCHEDULE.

[Author's notes are inserted in square brackets.]

[Part I. of this schedule is repealed and other equivalents substituted by sect. 2 of the Weights and Measures (Metric System) Act, 1897, and by Order in Council of 19 May, 1898. The new equivalents are here inserted.]

(*a*) EQUIVALENTS OF METRIC WEIGHTS AND MEASURES IN TERMS OF IMPERIAL WEIGHTS AND MEASURES FOR USE IN TRADE.

Metric to Imperial.

Linear measure:

1 millimetre (mm.) ($\frac{1}{1000}$ m.)	. =	0·03937 inch.
1 centimetre ($\frac{1}{100}$ m.) .	. =	0·3937 inch.
1 decimetre ($\frac{1}{10}$ m.) . .	. =	3·937 inches.

(*a*) [These tables are calculated from the fundamental comparison of the standards of each system. The particular equivalents here given have not in all cases been worked out to the same degree of accuracy, *e.g.* the equivalent of *dekalitre* is 2·19975, and not 2·2 *gallons* as given; similarly in other cases. The fundamental items are given more accurately than the others.]

1 METRE (m.) . . . . =	39·370113 INCHES. 3·280843 FEET. 1·0936143 YARDS.
1 dekametre (10 m.) . . . =	10·936 yards.
1 hectometre (100 m.). . . =	109·36 yards.
1 kilometre (1000 m.) . . . =	0·62137 mile.

Square measure:

1 square centimetre . . . =	0·15500 square inch.
1 square decimetre (100 square centimetres) . . . . . =	15·500 square inch.
1 square metre (100 square decimetres) . . . . . =	10·7639 square feet. 1·1960 square yards.
1 are (100 square metres) . . =	119·60 square yards.
1 hectare (100 ares or 10,0000 square metres) . . . . . =	2·4711 acres.

Cubic measure:

1 cubic centimetre . . . =	0·0610 cubic inch.
1 cubic decimetre (c.d.) (1000 cubic centimetres . . . . . =	61·024 cubic inches.
1 cubic metre (1000 cubic decimetres)	35·3148 cubic feet. 1·307954 cubic yards.

Measure of capacity:

1 centilitre ($\frac{1}{100}$ litre) . . . =	0·070 gill.
1 decilitre ($\frac{1}{10}$ litre) . . . =	0·176 pint.
1 LITRE . . . . . =	1·75980 PINTS.
1 dekalitre (10 litres) . . . =	2·200 gallons.
1 hectolitre (100 litres) . . =	2·75 bushels.

Weight:

	Avoirdupois.
1 milligram ($\frac{1}{1000}$ grm.) . . =	0·015 grain.
1 centigram ($\frac{1}{100}$ grm.) . . =	0·154 „
1 decigram ($\frac{1}{10}$ grm.) . . . =	1·543 „
1 gram (1 grm.) . . . . =	15·432 grains.
1 dekagram (10 grm.) . . . =	5·644 drams.
1 hectogram (100 grm.) . . =	3·527 ozs.
1 KILOGRAM (1000 grm.) . . =	2·2046223 LBS. or 15432·3564 GRAINS.
1 myriagram (10 kilog.) . . =	22·046 lbs.
1 quintal (100 kilog.) . . . =	1·968 cwt.
1 tonne (1000 kilog.) . . . =	0·9842 ton.

Weight:

	Troy.
1 gram (1 grm.) . . . . =	0·03215 oz. 15·432 grains.

	Apothecaries'.
1 gram (1 grm.) . . . . =	0·2572 drachm. 0·7716 scruple. 15·432 grains.

Equivalents of Imperial and Metric Weights and Measures.

Imperial to Metric.

Linear measure:

1 inch	=	25·400 millimetres.
1 foot (12 inches)	=	0·30480 metre.
1 YARD (3 feet)	=	0·914399 METRE.
1 fathom (6 feet)	=	1·8288 metre.
1 pole (5½ yards	=	5·0292 metres.
1 chain (22 yards)	=	20·1168 „
1 furlong (220 yards)	=	201·168 „
1 mile (8 furlongs)	=	1·6039 kilometres.

Square measure:

1 square inch	=	6·4516 sq. centimetres.
1 square foot (144 square inches)	=	9·2003 sq. decimetres.
1 square yard (9 square feet)	=	0·836126 square metre.
1 perch (30¼ square yards)	=	25·293 square metres.
1 rood (40 perches)	=	10·117 ares.
1 acre (4840) square yards)	=	0·404680 hectare.
1 square mile (640 acres)	=	259·00 hectares.

Cubic measure:

1 cubic inch	=	16·387 cubic centimetres.
1 cubic foot (1728 cubic inches)	=	0·028317 cubic metre.
1 cubic yard (27 cubic feet)	=	0·764553 cubic metre.

Measures of capacity:

1 gill	=	1·42 decilitre.
1 pint (4 gills)	=	0·568 litre.
1 quart (2 gallons)	=	1·136 „
1 GALLON (4 quarts)	=	4·5459631 LITRES.
1 peck (2 gallons)	=	9·092 „
1 bushel (8 gallons)	=	3·637 dekalitres.
1 quarter (8 bushels)	=	2·909 hectolitres.

(*a*) *Apothecaries' measure:*

1 minim	=	0·059 millilitre.
1 fluid scruple	=	1·184 „
1 fluid dram (60 minims)	=	3·552 „
1 fluid ounce (8 drams)	=	2·8423 centilitres.
1 pint	=	0·568 litre.
1 GALLON (8 pints or 160 fl. ozs.).	=	4·5459631 LITRES.

(*a*) [Apothecaries' weights are troy weights, whereas apothecaries' measures are estimated as the measure of the corresponding *avoirdupois* weight of distilled water; thus, a *fluid dram* is the eighth part of a *fluid ounce*, which is the measure of volume of *an avoirdupois ounce* of distilled water; whereas a *drachm* is the *eighth* part of a *troy ounce*. The apothecaries' measures are not the measures of the corresponding apothecaries' weights of distilled water. Hence the spelling "dram" is here substituted by the author for "drachm," to distinguish between avoirdupois and troy weights. The latter spelling is used for both in the Order in Council.]

Avoirdupois weight:

1 grain	=	0·0648 gram.
1 dram	=	1·772 „
1 ounce (16 drs.)	=	28·350 „
1 POUND (16 ozs. or 7000 grains)	=	0·45359243 KILOGRAM.
1 stone (14 lbs.)	=	6·350 „
1 quarter (28 lbs.)	=	12·70 „
1 hundredweight (cwt.) (112 lbs).	=	50·80 „ or 0·5080 quintal.
1 ton (20 cwt.)	=	1·0160 tonnes, or 1016 kilograms.

Troy weight:

1 grain	=	0·0648 gram.
1 pennyweight (24 grains)	=	1·5552 „
1 troy ounce (20 pennyweights)	=	31·1035 grams.

Apothecaries' weight:

1 grain	=	0·0648 grams.
1 scruple (20 grains)	=	1·296 „
1 drachm (3 scruples)	=	3·888 „
1 ounce (8 drachms)	=	31·1035 „

NOTE.—Approximately one litre equals 1000 cubic centimetres (*sic*), and one millilitre equals 1·00016 cubic centimetres.

PART II.

Metric Standards.

List of metric standards in the custody of the Board of Trade at the passing of this Act:—

Measures of Length.—Double metre, or 2 metres, metre, decimetre, centimetre, and millimetre.

Weights.—Kilograms: 20, 10, 5, 2, and 1.
Grams: 500, 200, 100, 50, 20, 10, 5, 2, and 1.
Decigrams: 5, 2, and 1.
Milligrams: 5, 2, 1, and 0·5.

Measures of Capacity.—Litres: 20, 10, 5, 2, and 1.
Cubic centimetres: 500, 200, 100, 50, 20, 10, 5, 2, and 1.
1000 cubic centimetres make 1 litre.

FOURTH SCHEDULE.

[Author's notes are inserted in square brackets.]
[Sects. 43, 50, 64, *ante*, pp. 169, 175, 181.]

Local Authorities.

England.

[By sect. 35 of Act of 1889, the term "local authority" is to be read subject to the Local Government Act of 1888, of which the material provisions are set out, *post*, p. 376.]

Area.	Local Authority.	Local Rate.
County . . .	The justices in general or quarter sessions assembled.	The county rate.
County of the City of London.	The court of the Lord Mayor and alderman of the city.	The consolidated rate.
Borough . . .	The mayor, aldermen, and burgesses acting by the council.	The borough fund and borough rate.

Scotland.

[By the Local Government (Scotland) Act, 1889, the powers of the justices of the peace of the county in relation to the execution of this Act are transferred to the County Councils (see *post*, p. 376).]

Area.	Local Authority.	Local Rate.
County . . .	The justices in general or quarter sessions assembled.	The county general assessment.
Burgh . . .	The magistrates.	The police assessment.

["Burgh" now includes a burgh under the Burgh Police Act, 1892 (see *post*, p. 352).]

Ireland.

[The County Council and County Rate now take the place of the grand jury and presentments respectively: 61 & 62 Vict. c. 37, s. 4.]

Area.	Local Authority.	Local Rate.
County . . .	The grand jury acting at any assizes or presenting term.	The presentments to be made by the grand jury.
Such portions of the police district of Dublin metropolis as is without the municipal boundary of the borough of Dublin.	The Commissioners of the Dublin metropolitan police.	The funds applicable to defray the expenses of the Dublin metropolitan police.
Borough . . .	Town Council . .	Rate to be levied by the council, or, if the borough is liable to county cess and no rate is levied in the borough, the county cess of the county in which the borough or the larger part thereof is situate.

Notes.

For the purposes of this schedule—

The expression "county," as regards England, does not include a county of a city or a county of a town, but includes every riding, division, or parts of a county having a separate court of quarter sessions. The Soke of Peterborough shall be deemed to be a county, but every other liberty of a county not forming part of the City of London shall be deemed to form part of the county in which the same is situate or which it adjoins, and if it adjoins more than one county, then of the county with which it has the longest common boundary.

The expression "borough," as regards England, means any place for the time being subject to the Municipal Corporation Act, 1835 [now 1882 by sect. 42 of that Act], and any Act amending the same, which has a separate commission of the peace.

The expression "county," as regards Ireland, includes a riding and a county of a city and a county of a town.

The county of Dublin shall be deemed not to include any portion of the police district of Dublin metropolis.

The two constabulary districts of the county of Galway shall respectively be deemed to be counties for the purposes of this Act.

The expression "borough," as regards Ireland, means any borough or town corporate.

In the borough of Dublin the rate to be levied by the council shall mean the improvement rate.

FIFTH SCHEDULE [Repealed by Act of 1889].

SIXTH SCHEDULE—First Part:—Enactment repealed.

[Insertion unnecessary.]

Second Part:—Enactments re-enacted.

[Sects. 64, 86, *ante*, pp. 181, 195.]

5 & 6 Will. 4, c. 63, s. 9 [but repealed by Act of 1889].

5 & 6 Will. 4, c. 63, s. 26.

Supply of weigh-masters in Ireland with scales, and copies of local standards.

In Ireland, in every city or town, not being a county of itself, every person, persons, or body corporate exercising the privilege of appointing a weigh-master, shall supply him with accurate scales, and with an accurate set of copies of the local standards, and in default shall be liable on summary conviction to a fine of twenty pounds, and the accuracy of such set of copies shall be certified under the hand of some inspector of weights and measures. They shall also, once at least in every five years, cause such copies to be re-adjusted by comparison with some local standards which have been verified by the Board of Trade, and in default shall be liable on summary conviction to a fine of £5.

Such set of copies shall for the purpose of comparison and verification be considered local standards, and shall be used for no other purpose whatever, and if they are so used the person using the same shall be liable on summary conviction to a fine of £5.

22 & 23 Vict. c. 56, ss. 6, 8, 12.

Owners of markets to provide scales, etc.

The owners or managers of any public market in Great Britain where goods are exposed or kept for sale shall provide proper scales and balances and weights and measures or other machines, for the purpose of weighing or measuring all goods sold, offered, or exposed for sale in any such market, and shall deposit the same at the office of the clerk or toll collector of such market, or some other convenient place, and shall have the accuracy of all such scales and balances and weights and measures or other machines tested at least twice in every year by the inspector of weights and measures of and for the county, burgh, or place where the market is situate;

All expenses attending the purchase, adjusting, and testing thereof shall be paid out of the moneys collected for tolls in the market;

Such clerk or toll collector shall at all reasonable times, whenever called upon so to do, weigh or measure all goods which have been sold, offered, or exposed for sale in any such market, upon payment of such reasonable sum as may from time to time be decided upon by the said owners or managers, subject to the approval and revision of the justices in general or quarter sessions assembled, if such market be in England, or of the sheriff if it be in Scotland;

For every contravention of this section the offender shall be liable, on summary conviction, to a fine not exceeding £5.

22 & 23 Vict. c. 56, ss. 7, 8, 12.

Power to clerks of markets to inspect goods sold, etc., and if weighing found deficient, to summon the offender.

Every clerk or toll collector of any public market in Great Britain, at all reasonable times, may weigh or measure all goods sold, offered, or exposed for sale in any such market; and if upon such weighing or measuring any such goods are found deficient in weight or measure or otherwise contrary to the provisions of this Act, such clerk or toll collector shall take the necessary proceedings for recovering any fine, to which the person selling, offering, or exposing for sale, or causing to be sold, offered, or exposed for sale, such goods, is liable, and the court convicting the offender may award out of the fine to such clerk or toll collector such reasonable remuneration as to the court seems fit.

For every offence against or disobedience to this section the offender shall be liable on summary conviction to a fine not exceeding £5.

[Other provisions as to weighing in markets and fairs are given, *post*, pp. 365–376.]

THE WEIGHTS AND MEASURES ACT, 1889.

52 & 53 Vict. c. 21.

An Act for amending the Law relating to Weights and Measures, and for other purposes connected therewith.

(26*th July*, 1889.)

Whereas it is expedient to amend the Weights and Measures Act, 1878 [41 & 42 Vict. c. 49] (hereinafter referred to as the principal Act), and the law relating to the sale of coal:

Be it therefore enacted, etc.

PART I.

Weights and Measures.

Verification of weighing instruments.

1.—(1) Every weighing instrument used for trade shall be verified and stamped by an inspector of weights and measures with a stamp of verification under this Act.

(2) Every person who, after the expiration of twelve months from the commencement of this Act, uses, or has in his possession for use for trade, any weighing instrument not stamped as required by this Act, shall be liable to a fine not exceeding £2, or in the case of a second offence £5. . . .

(4) Section thirty-two of the principal Act shall apply to weighing instruments in like manner as it applies to weights and measures.

There is no extension to weighing instruments of the penalty for wilfully increasing or diminishing a weight so stamped.

This section is carried out by inspectors subject to the regulations of the Board of Trade made under sect. 5 of the Act of 1904, *post*, p. 240.

The provisions of this section also extend to instruments used for checking or ascertaining the wages of persons employed in factories (see 1 Edw. 7, c. 22, s. 117, *post*, p. 330), and in mines (see 50 & 51 Vict. c. 58, s. 15, *post*, p. 329).

As to what is included in the term "used for trade," see cases under the Act of 1878, *ante*, pp. 150, 153, 157, 160.

Sub-section (3) above is omitted as it extended sect. 53 of the Act of 1878, which is now repealed.

Sect. 32 of the Act of 1878 deals with forging or counterfeiting the stamp of an inspector (*ante*, p. 162).

2. The Board of Trade may, if they think fit, at the expense of the local authority, deposit with any inspector of weights and measures copies of any of the metric standards in their custody, and cause to be verified with any copy so deposited any metric weights and measures which can under section thirty-eight of the principal Act be compared with the metric standards in their custody. Local verification of metric weights and measures.

Sect. 38 of the principal Act is repealed by sect. 2 of the Weights and Measures (Metric System) Act, 1897. Metric weights and measures can now be used for trade (see note to sect. 8 of the principal Act, *ante*, p. 144).

3. The fine for a second or a subsequent offence under section twenty-five or section twenty-six of the principal Amendment of 41 & 42

Vict. c. 49, ss. 25 and 26, *ante*, pp. 153, 158.

Act shall be a sum not exceeding £20, and the provisions of the said section twenty-six with respect to forfeiture shall apply to weighing instruments in like manner as they apply to weights, measures, scales, balances, and steelyards.

Liability to imprisonment in cases of fraud.

4. Where a person is convicted under any section of the principal Act or this Act of *any* offence, and the court by which he is convicted is of opinion that such offence was committed with intent to defraud, he shall be liable, in addition to or in lieu of any fine, to be imprisoned with or without hard labour for a term not exceeding two months.

The word in italics denotes the amendment made by sect. 13 of the Act of 1904.

5. [Repeal of 41 & 42 Vict. c. 49, ss. 16, 46.]

New denominations of standards.

6. The Board of Trade shall from time to time cause such new denominations of standards for the measurement of electricity, temperature, pressure, or gravities as appear to them to be required for use for trade to be made and duly verified, and those new denominations of standards, when approved by Her Majesty in Council shall, whether derived from imperial or from other standards, be Board of Trade standards, in like manner as if they were mentioned in the Second Schedule to the principal Act.

Ante, p. 198.

Working standards.

7. Any local authority may, *and if so directed by the Board of Trade shall* provide for the use of their officers working standards of measure and weight, and scale-beams of such material and in such form as the Board of Trade may approve, and those standards may, if verified in such manner as the Board of Trade from time to time direct, be used for the inspection and verification of weights and measures as if they were local standards.

The words in italics denote the amendment made by sect. 13 of the Act of 1904.

8.—(1) The Board of Trade may, on the comparison and verification of weights and measures, not being standards for the use of a local authority or their officers, and not being coin weights, and on the examination or testing of weighing or measuring instruments, charge and take such fees as may from time to time be approved by the Treasury.

Power for Board of Trade to take fees.

(2) The fees taken under this section may be applied in such manner and to such extent as the Treasury may from time to time direct in aid of money provided by Parliament for expenses of the Board of Trade under this Act, and if and as far as not so applied shall be paid into the Exchequer.

This section has been extended to the taking of fees for examinations and tests under s. 6 of the Act of 1904, *post*, p. 243.

Tables of fees are set out, *post*, pp. 394, 396.

9. [*General regulations. Repealed by sect.* 5 *of the Act of* 1904.]

10.—(1) The Board of Trade may from time to time appoint an officer to hold a local inquiry with respect to the administration of the law relating to weights and measures within the jurisdiction of any local authority.

Provision as to local inquiries.

(2) The appointment may be made either on the application of the local authority or without such application, but with the concurrence of the Treasury.

(3) The officer so appointed shall visit the office of the local inspector of weights and measures, and shall, among other things, inquire into the procedure observed in the verification and inspection of weights, measures, and weighing instruments within that jurisdiction; and, on the completion of the local inquiry, shall report to the Board of Trade and to the local authority on the condition and equipment of the office visited, and on the mode in

which the law relating to weights and measures is being carried out within the jurisdiction of that authority.

(4) Where the appointment is made on the application of a local authority, the costs incurred in relation to the inquiry, including the remuneration of any officer engaged in the inquiry, not exceeding £3 3*s.* a day, shall be paid by the local authority applying for or assenting to the inquiry, and the Board of Trade may certify the amount of the costs incurred, and any sum so certified and directed by the Board to be paid by any local authority shall be a debt to the Crown from that authority.

(5) Where the appointment is made otherwise than on the application of the local authority, the costs incurred in relation to the inquiry, including the remuneration aforesaid, shall be paid out of moneys provided by Parliament.

11. [*Sub-sections* (1) *and* (2) *are repealed by s.* 8 *of the Act of* 1904.]

Qualification of inspectors of weights and measures.

(3) There shall be charged in respect of the examinations under this section such fees as the Board of Trade, with the concurrence of the Treasury, from time to time direct, and all such fees shall be applied in such manner and to such extent as the Treasury from time to time shall direct, in aid of money provided by Parliament for expenses of the Board of Trade under this Act, and if and as far as not so applied shall be paid into the Exchequer.

This enactment now applies to the appointment of inspectors under sect. 8 of the Act of 1904, *post*, p. 245. The fee for the examination is £1 10*s.*

Inspector not to be maker, seller, or adjuster of weights, measures,

12.—(1) An inspector of weights and measures shall not, during the time he holds office, be a person deriving any profit from or employed in the making, adjusting, or selling of weights, measures, or measuring or weighing instruments:

(2) Provided that in any district where, on the representation of the local authority, it appears to be desirable for an inspector of weights and measures to be allowed to adjust weights and measures, the Board of Trade may, if they think fit, authorize an inspector appointed by that local authority to act as an adjuster of weights and measures.

or weighing instruments.

(3) An inspector so authorized may for any such adjustment make such charges as the local authority approve, and shall account for and pay any money received by him in respect of such charges in such manner as the local authority direct.

13.—(1) An inspector of weights and measures may take in respect of the verification and stamping of weights, measures, and weighing instruments the fees specified in the First Schedule to this Act, and no others, and *no discount commission or rebate of any kind shall be given nor any allowance made by such inspector or by the local authority for the use of tools premises machinery or instruments or assistance rendered for the purposes of such verification and stamping, except when such verification and stamping take place on the premises of a glass or earthenware manufacturer, in which case such adequate and reasonable allowance as may be agreed upon by the local authority, with the consent of the Board of Trade, may be made in respect of such use or assistance as aforesaid,* and such inspector shall at such times, not less often than once a quarter, as the local authority direct, account for and pay over to the local authority, or as they direct, all fees so taken.

Fees for verification and stamping, *post*, p. 231.

(2) If the Board of Trade represent to Her Majesty that it would be expedient to fix fees to be paid on the verification and stamping of weights, measures, or weighing instruments, in cases other than those specified in the

said schedule, it shall be lawful for Her Majesty, by Order in Council, from time to time to direct such fees to be paid.

The words in italics denote the amendment made by sect. 13 of the Act of 1904.

Denominating.

This section does not authorize the charging of any fees for "denominating" (*i.e.* marking denominations) apart from stamping. The denominations should be marked by the makers of the articles.

Rebates.

The local authority cannot direct that these fees be not taken; and an inspector who, in pursuance of such direction neglects to take them, may be surcharged the amounts: *R.* v. *Roberts*, 1901, 2 K. B. 117.

This section prohibits discount in any form, but it allows fees to be remitted altogether in cases where on re-verification the articles are found correct. In some cases rebates were allowed for alleged assistance rendered and work done by the manufacturer. This practice was declared illegal by the above amendment.

The cost of stamping, etc., is a considerable item in the cost of production. Those makers who have obtained the benefit of the rebate under sub-sect. (1) as amended have therefore a considerable advantage over others.

Fees.

The scale of fees is now fixed by Order in Council of the 21st Dec., 1907, under sect. 9 of the Act of 1904, and is set out in the place of the schedule, *post*, pp. 231–234.

Publication of convictions.

14. Where a person is convicted before any court of any offence under the principal Act or this Act, the court may, if it thinks fit, cause the conviction to be published in such manner as it thinks desirable.

As no special provisions with regard to the cost of publishing convictions are made, it appears that the expense of publication is a part of the expenses of administering the Acts.

Verification of gas standards.

15. The provisions of the principal Act and of this Act as to the verification and re-verification of local and working standards shall apply to the standards used by any local authority in testing meters under 22 & 23 Vict. c. 66, and the Acts amending the same.

16. Notwithstanding anything in section fifty-four of the principal Act, and any other provision in that or any other Act, the inspectors of weights and measures appointed by the London County Council shall alone, within the whole of the county of London, exclusive of the city of London, have the powers and discharge the duties of inspectors of weights and measures appointed under the principal Act; provided that any inspector of weights and measures who, at the passing of this Act, though not an officer of the county council, holds office in any parish or place in the county of London, exclusive of the city of London, shall become an officer of that council, and if removed from such appointment by the London County Council he shall be entitled to be regarded as an existing officer under the Local Government Act, 1888 [51 & 52 Vict. c. 41], and to receive such compensation as existing officers whose offices are affected are under that Act entitled to receive.

Powers to London County Council to exercise jurisdiction throughout the county, *ante*, p. 176.

This section does not appear to abridge the powers of the burgesses of Westminster reserved to them by sect. 69 of the Act of 1878 (*ante*, p. 183).

17. Notwithstanding anything in section sixty-seven or sixty-eight of the principal Act, a person using weights or measures in the city of London shall not be required to have his weights or measures verified or stamped by more than one authority.

Provision as to city of London, *ante*, p. 182.

18. The copies required to be provided by the local authority in Ireland of their local standards, and the scales and stamps used by inspectors of weights and measures in Ireland, shall be of such material and in such form as the Board of Trade may approve.

Provision of copies of local standards in Ireland.

19.—(1) Notwithstanding anything in the principal Act, the Township Commissioners shall have power to appoint and shall appoint inspectors of weights and

Amendment of 41 & 42 Vict. c. 49,

as to inspectors in Ireland, *post*, p. 235.

Ante, p. 191.

measures in each of the townships in Ireland mentioned in the Second Schedule to this Act, in lieu of the ex-officio inspectors under section eighty-one of the principal Act; and in each of the different areas of the said townships, for the purposes of the principal Act and this Act, "the local rate" shall mean the rate to be levied by the Township Commissioners, or, if the township is liable to county cess and no rate is levied in the township, the county cess of the county of Dublin.

Ante, p. 191.

(2) Notwithstanding anything in the same section of the principal Act, the provisions of the principal Act and of this Act concerning the taking of fees by inspectors of weights and measures shall apply to the ex-officio inspectors in Ireland, and the fees taken by those inspectors elsewhere than in the Dublin Metropolitan Police District shall be applied for the benefit of the Royal Irish Constabulary in such manner as the Lord Lieutenant, with the assent of the Treasury, may direct, subject however to a deduction of such amount as the Treasury may from time to time sanction for expenses incurred by the Board of Trade in execution of their duties in Ireland under the principal Act and this Act.

Ante, p. 191.

(3) Whereas the rank of acting inspector in the Dublin Metropolitan Police Force has been abolished, therefore in the said section of the principal Act a reference to sergeants of the Dublin Metropolitan Police Force shall be substituted for the reference to acting inspectors.

PART II.

Sale of Coal.

There is a local Act set out, *post*, p. 340, regulating the sale of coal in London and Westminster.

Coal to be sold by weight.

20.—(1) All coal shall be sold by weight only, except by the written consent of the purchaser it is sold by

boat-load or by waggons or tubs delivered from the colliery into the works of the purchaser.

(2) If any person sells coal otherwise than is required by this section he shall be liable to a fine not exceeding £5 for every such sale.

This is the only section of this part which applies to Scotland. The sale of coal in Scotland is regulated by the Burgh Police Act, 1892, 55 & 56 Vict. c. 55, portions of which are set out, *post*, p. 346.

Imprisonment may be inflicted for any offence which is committed with intent to defraud (*ante*, p. 212).

Weight ticket or note on delivery.

21.—(1) Where any quantity of coal exceeding two cwt. is delivered by means of any vehicle to a purchaser, the seller of the coal shall therewith deliver, or cause to be delivered, or to be sent by post or otherwise, to the purchaser or to his servant, before any part of the coal is unloaded, a ticket or note according to the form in the Third Schedule to this Act, or according to a form to the like effect. *Post*, p. 235.

(2) If default is made in complying with the requirements of this section with respect to the delivery or sending of a ticket or note, or if the quantity of coal delivered is less than the quantity expressed in the ticket or note, the seller of the coal shall be liable to a fine not exceeding £5.

(3) If any person attending on any such vehicle, having received any such ticket or note for delivery to the purchaser, refuses or neglects to deliver it as required by this section, or, on being requested so to do, to exhibit it to any inspector of weights and measures, or other officer appointed for the purpose by the local authority, he shall be liable to a fine not exceeding £5.

Imprisonment may be inflicted for any offence committed with intent to defraud (*ante*, p. 212).

Where a truck-load of coal is bought at so much per ton, and

delivered by three carts each making two journeys, this section requires that tickets must be delivered with each cart-load, so that the purchaser may have an opportunity of checking the quantity: *Stangoe* v. *Slatter*, 60 J. P. 342. But see *Kyle* v. *Dunsdon*, *post*, p. 404.

A sale and delivery of "2 tons of small coals in 20 sacks, each containing 2 cwt.," is a sale of an amount over 2 cwt., namely, 2 tons, and not 20 sales of 2 cwt. each. This section is complied with by a note in the above terms, and by the whole weight being correct, although some sacks contained several pounds less and others more than 2 cwt. The section does not apply at all to 20 sales of sacks of 2 cwt. each: *Godfrey* v. *Radford*, 60 J. P. 615.

Five tons of coal were ordered. Carters came with three loads and handed to the purchasers' porter a weigh ticket requesting the purchasers to receive 5 tons best Wigan Coal, which was in 80 sacks each weighing 1¼ cwt. The porter demanded that the coal be weighed and accompanied the carters to the corporation weighbridge, where it appeared that the weight was short by 7½ cwt. The carter brought back the coal to the purchasers' house and again tendered delivery, which the porter refused to accept. *Held*, that at most there was only a constructive delivery and as actual delivery was contemplated by sub-sect. (2) no offence against this section had been committed: *Roy. Coll. Surgeons* v. *Wallace Bros. Ltd.*, 35 Ir. L. T. R. 209.

It is sufficient if the ticket be filled up after the arrival of the coal at the purchasers' premises, and after it is there weighed before being unloaded: *Edwards* v. *Purnell*, 1899, 1 Q. B. 449.

The name under which the seller carries on business is sufficient to designate the seller: *Cameron* v. *Tyler*, 1899, 2 Q. B. 94.

Tare weight of vehicle where coal sold in bulk.

22.—(1) Where any quantity of coal exceeding two cwt. is conveyed for delivery on sale in a vehicle in bulk, the seller of the coal shall, unless the vehicle is provided by the purchaser, cause the weight of the vehicle, as well as of the coal contained therein, to be previously ascertained by a weighing instrument stamped by the inspector of weights and measures, and being on or near to the place from which the coal is brought, and shall from time to time cause the tare weight of the vehicle to be marked thereon in such manner as the local authority approve.

(2) In any such case the seller of the coal shall insert or cause to be inserted in the ticket required by this Act to be given by him a statement of the correct weight of

the vehicle, or of the vehicle and of the animal drawing it where both are weighed together with the load, as well as of the correct weight of the coal contained in the vehicle.

(3) If any person fails to comply with the requirements of this section, he shall be liable to a fine not exceeding £5.

The "correct weight" mentioned in sub-section (2) is the weight as ascertained by sub-section (1), hence the fact that the weight in the ticket is found not to be 28 lbs. more than the weight ascertained by the inspector by weighing at or near time and place of delivery is no evidence that the ticket was incorrectly filled in: *Knowles* v. *Sinclair*, 1898, 1 Q. B. 170.

The tare weight of the vehicle need not be "previously ascertained" before each delivery, it is sufficient if it be done so recently that its correct weight on the occasion of the delivery in question be ascertained: *Beardsley* v. *Pike*, 90 L. T. 652.

Imprisonment may be given if the offence was committed with intent to defraud (*ante*, p. 212).

Frauds by drivers of coal carts.

23. If the person in charge of any vehicle in which coal is being carried wilfully makes any false statement as to the tare weight of the vehicle, or wilfully does any act by which either the seller or the purchaser of the coal is defrauded, he shall be liable to a fine not exceeding £5.

Imprisonment may be given for any offence that is committed with intent to defraud (*ante*, p. 212).

Deficiency in weight of coal on small sales.

24. If any person on the sale of coal in any quantity not exceeding two cwt. fraudulently delivers to the purchaser a less quantity of coal than is agreed to be sold he shall be liable to a fine not exceeding £5.

Imprisonment may be given for any offence that is committed with intent to defraud (*ante*, p. 212).

Weighing instrument to be kept in place where coal sold by retail.

25.—(1) Where coal is sold by retail for delivery at the place where it is kept for sale and there is not at or near such place any weighing instrument stamped by an inspector of weights and measures at which the coal can

be weighed, the seller shall keep at that place a weighing instrument stamped as aforesaid, and shall, if so required by any purchaser, or by any inspector of weights and measures, or by any other officer appointed for the purpose by the local authority, weigh any coal before the sale or delivery thereof.

(2) If any person fails to comply with the requirements of this section, he shall be liable to a fine not exceeding for a first offence £2, and for any subsequent offence £5.

It must be noted that the persons who may require the coal to be weighed are the purchaser, inspector of weights and measures, and "any other officer appointed *for the purpose*;" hence, a bye-law of a local authority, the effect of which was to put it in the power of any constable to require the seller to weigh coal, is bad, being unreasonable: *Alty* v. *Farrell*, 4 M. R. 113.

Imprisonment may be imposed for any offence committed with intent to defraud (*ante*, p. 212).

Erection and maintenance of weighing instruments.

26.—(1) The local authority may erect and maintain fixed weighing instruments at convenient places for the purpose of weighing coal, and may provide, furnish, and maintain portable weighing instruments for the same purpose, and may appoint proper persons to keep and attend any such instruments.

(2) If the keeper of any such fixed weighing instrument refuses, without reasonable excuse, to weigh or re-weigh any vehicle or coal, or so weighs any vehicle or coal as wilfully to defraud either the seller or the purchaser of coal, he shall be liable to a fine not exceeding £5.

Imprisonment may be inflicted for any offence that is committed with intent to defraud (*ante*, p. 212).

Power to require weighing of coal or vehicle.

27.—(1) Any seller or purchaser of coal, person in charge of a vehicle in which coal is carried, inspector of weights and measures, or other officer appointed for the purpose by the local authority, may require that any coal

or any vehicle used for the carriage of coal in bulk be weighed or re-weighed by any weighing instrument stamped by an inspector of weights and measures.

Provided as follows:—

(*a*) No seller of coal or person in charge of a vehicle in which coal is carried shall be required under this section to carry coal beyond such distance, not exceeding half a mile, as may be prescribed in that behalf by the local authority:

(*b*) Where any such coal or vehicle has at the instance of the purchaser been weighed or re-weighed in pursuance of this section, and found to be of the weight stated in that behalf by the seller of the coal or the person in charge of the vehicle, the purchaser shall be liable to the payment of all reasonable cost actually incurred of and incidental to the weighing or re-weighing.

(2) If any person obstructs any weighing or re-weighing authorized by this section, he shall be liable to a fine not exceeding £5.

Imprisonment may be inflicted for any offence that is committed with intent to defraud (*ante*, p. 212).

By Order in Council dated May 1, 1890, par. (*a*) of sub-section 1 above is declared not to apply to the Borough of Nottingham, because sect. 86 of the Nottingham Improvement Act, 1874, is more stringent.

Bye-laws with respect to the sale of coal.

28.—(1) Any local authority may from time to time make, revoke, and alter bye-laws,

(*a*) regulating for the purposes of this Act the sale of coal in quantities not exceeding two cwt.; and

(*b*) requiring, either generally or in specified classes of cases, a weighing instrument, of a form approved by the local authority, to be carried with any vehicle in which coal is carried for sale or delivery to a purchaser; and

(*c*) prescribing the distance beyond which coal is not to be required to be carried for the purpose of being weighed or re-weighed in pursuance of this Act; and

(*d*) fixing the fees to be paid for the use of any weighing instrument maintained by the local authority;

and may by such bye-laws impose fines, recoverable summarily, and not exceeding in each case £5, for the breach of any such bye-law.

(2) Every bye-law made under this section shall, before being brought into operation, be approved by the Board of Trade and be published in such manner as the local authority think sufficient for giving notice thereof to all persons interested, and a copy of every such bye-law shall be sent by the local authority to the Board of Trade.

A bye-law, requiring that every vehicle carrying coal for sale or delivery "shall carry therewith a weighing machine of a form approved by" the local authority is valid, although it does not specify the form of machine required: *Martin* v. *Clark*, 62 L. J. M. C. 178; All. 97. Nor is such a bye-law rendered void because it has some further provision which is *ultra vires*: *Kent C.C.* v. *Humphreys & Watts*, 3 M. R. 135; 1895, 1 Q. B. 903.

A bye-law required that a correct weighing instrument should be carried for "the purpose of weighing any quantity of coal not exceeding 2 cwt." A dealer carried bags of coal for sale, some of 1 cwt., and others of ½ cwt. He had scales, but only one weight, which was a ½ cwt. A breach of the bye-law was committed: *Crick* v. *Nicholls*, 1905, 1 K. B. 501.

A bye-law was in the following terms:—"The person in charge of every vehicle carrying coal for sale or delivery to a purchaser shall carry therewith a weighing instrument of a form approved by the County Council, together with correct weights or counterpoises of the denomination of a Board of Trade standard, and such person shall re-weigh the coal upon being requested to do so by the purchaser or by any one on his behalf, or by an Inspector of Weights and Measures." It is a breach of this bye-law to deliver sacks of 1 cwt. each, when the only weights carried were two of half a hundredweight each, and

no smaller ones to balance the weight of the sacks: *Houghton* v. *Andrews*, 1905, 1 K. B. 503 *n.* In another case under the same bye-law the facts were as follows:—"A coal merchant had contracted for the sale of coal to one P and for its delivery at a railway station. The merchant was also a carter and had a separate contract for the carting the coal from the station to P's house, and for delivering the same at certain cottages on P's estate. P allowed his employees to purchase this coal at cost price. The person in charge of the vehicle who delivered the coal at the cottages delivered a ton of coal to one of the employees who had so purchased it to whom he gave a delivery ticket. No weighing appliances were carried on this cart. *Held*, that the person so delivering the coal was within the bye-law, as there was no distinction between the case of a purchaser at cost price and one for profit: *Kyle* v. *May*, 7 M. R. 117; All. 141.

Power to weigh coal in shop or vehicle.

29.—(1) Any inspector of weights and measures or officer appointed for the purpose by the local authority may, at all reasonable times, enter any building or part of a building or other place in which coal is sold or kept or exposed for sale, and may stop any vehicle carrying coal for sale or for delivery to a purchaser, and may test any weights and weighing instruments found in any such place or vehicle, and may weigh any load, sack, or other less quantity of coal, found in any such place or vehicle, or which is in course of delivery to any purchaser.

(2) If it appears to a court of summary jurisdiction that any load, sack, or less quantity so weighed is of less weight than that represented by the seller, the person selling or keeping or exposing the coal for sale, or the person in charge of the vehicle, as the case may be, shall be liable to a fine not exceeding £5.

(3) Any person who obstructs or hinders any inspector acting under this section shall be liable to a fine not exceeding £5, or in the case of a second or subsequent offence £10.

Representation by servant,

Coal was brought to respondent's premises in sacks, which were weighed in the presence of the servant, and which the servant alleged were correct in weight. The sacks were then left on the respondent's

premises to be delivered to customers as ordered. The respondent having received an order for coal, ordered his servant to deliver 5 cwt. The servant took five sacks, believing each contained a cwt., and proceeded to deliver them. While on the way the servant was stopped by an inspector, who asked him the weight of the coal, to which he replied 5 cwt. The sacks were then weighed, and were found deficient in weight. *Held*, that in order to convict the seller, under this sub-section, there must be an actual representation by him as to the weight of the coal, and that the representation of the servant was not that of his master: *Roberts* v. *Woodward*, 25 Q. B. D. 412. See also *Paul* v. *Hargreaves*, *post*, p. 404.

by contractor,

A seller of coal made a contract with a contractor who undertook to deliver coal according to the seller's order. The delivery ticket was made out in the seller's office by his agent and given to the contractor, who in turn handed it to his own man, who delivered the coal, which was obtained at a coal merchant's. *Held*, that although the man was not the seller's servant, yet the ticket was the seller's representation, and that he was rightly convicted, the coal being of less weight than represented: *Baker* v. *Herd*, 58 J. P. 413.

by label.

But in the absence of evidence that the sacks have been tampered with, the label on the sack (when the weight is marked on such label) is a representation by the dealer of the amount of coal in the sack: *Franklin* v. *Godfrey*, 63 L. J. M. C. 239.

Power to make local exemptions.

30. Her Majesty the Queen may, from time to time, on the application of the local authority for any area, and on being satisfied that the provisions made by or under any local Act in force at the commencement of this Act, with respect to the sale of coal in that area are more stringent than the corresponding provisions of this Act, by Order in Council exempt that area from the provisions of this Part of this Act to such extent, and under such conditions, as may appear to Her Majesty in Council expedient.

This power has been acted upon when an Order in Council of 1st May, 1890, declared that sub-section *a* of sect. 27 of this Act shall not apply in the area of the Borough of Nottingham.

There are local Acts dealing with the sale of coal in force with respect to the following places:—

Ashton-under-Lyne.	Birmingham.
Barrow-in-Furness.	Bradford.
Birkenhead.	Brighton.

Carlisle.
Derby.
Dublin.
Hartlepool.
Hastings.
Hull.
Lincoln.
Liverpool.
London (City).
London (Metropolis).
Manchester.
Newcastle-on-Tyne.
Nottingham.
Oldham.
Sheffield.
Shrewsbury.
York.

31. This Part of this Act, except the provisions requiring coal to be sold by weight only, shall not extend to Scotland. Extent.

PART III.

Bread.

32. Nothing in the enactments referred to in the Fourth Schedule to this Act shall render any baker or seller of bread, or the journeyman, servant, or other person employed by such baker or seller of bread, liable to any forfeiture or penalty for refusing to weigh in the presence of the purchaser any bread conveyed or carried out in any cart or other carriage, unless he is requested so to do by or on behalf of the purchaser. Explanation of law as to bakers.

The enactments mentioned in the Fourth Schedule are sect. 9 of 3 Geo. 4, c. cvi., and sect. 7 of 6 & 7 Will. 4, c. 37. These are noted, *post*, p. 331.

PART IV.

Supplemental.

33.—(1) No proceeding or conviction for any offence punishable under this Act shall affect any civil remedy to which any person aggrieved by the offence may be entitled. Saving for liabilities otherwise than under Act.

(2) This Act shall not exempt any person from any indictment or other proceeding for an offence which is

punishable at common law or under some Act of Parliament other than this Act, so that no person be punished twice for the same offence.

(3) Where proceedings are taken before any court against any person in respect of any offence punishable under this Act, and the offence is also punishable at common law or under some Act of Parliament other than this Act, the court may direct that, instead of those proceedings being continued, proceedings shall be taken against that person at common law or under some Act of Parliament other than this Act.

This saving applies to the provisions for sale of bread, coal, and intoxicating liquors, noted, *post*, pp. 331, 340, and 363.

Construction of Act.

34. This Act and the principal Act shall be construed together as one Act.

Definitions.

35. In this Act, unless the context otherwise requires,—

"Weighing instrument" includes scales, with the weights belonging thereto, scale-beams, balances, spring-balances, steelyards, weighing machines, and other instruments for weighing:

"Measuring instrument" includes any instrument for the measurement of length, capacity, volume, temperature, pressure, or gravity, or for the measurement and determination of electrical quantities:

"Vehicle" means any carriage, cart, waggon, truck, barrow, or other means of carrying coal by land in whatever manner the same may be drawn or propelled, but does not include a railway truck or waggon:

"Inspector" means an inspector under the principal Act:

Other expressions have the same meaning as in the principal Act: Provided that the expression "local authority" shall, in its application to England, be construed subject to the provisions of the Local Government Act, 1888 [51 & 52 Vict. c. 41], and the expression "weighing machine" in the principal Act shall include any weighing instrument as defined by this Act.

By sect. 16 of the Act of 1904 the above definition of weighing instrument includes "a weighing instrument constructed to also calculate and indicate the price in money."

Repeal.

36.—(1) The enactments specified in the Fifth Schedule to this Act are hereby repealed to the extent mentioned in the third column of that schedule.

(2) The repeal of any enactment by this Act shall not affect—

(*a*) the past operation of any enactment so repealed, or anything duly done or suffered under any enactment so repealed; or

(*b*) any right or liability acquired or incurred under any enactment so repealed; or

(*c*) any penalty, forfeiture, or punishment incurred in respect of any offence committed against any enactment so repealed; or

(*d*) any power, legal proceeding, or remedy in respect of any such right, liability, penalty, forfeiture, or punishment as aforesaid; and any such power, legal proceeding, and remedy may be exercised and carried on as if this Act had not passed.

The Fifth Schedule comprised certain parts of the Act of 1878. As the repealed provisions have been omitted or noted in their respective places, it is unnecessary to insert the schedule.

Commencement.

37. This Act shall come into operation on the 1st January, 1890, which date is in this Act referred to as the commencement of this Act:

Provided as follows :—

(*a*) At any time after the passing of this Act any appointment, bye-law, or regulation may be made, and any other thing may be done, which appears to a local authority to be necessary or proper for the purpose of bringing this Act into operation at the commencement thereof;

(*b*) In Ireland, where a grand jury is the local authority, so much of this Act as concerns the powers and duties of the local authority and the consequences of the exercise of such powers and duties shall come into operation on the 1st May, 1890.

Saving for corporation of Dublin.

38. Nothing in this Act, or the principal Act, shall be held to affect any right or privilege conferred upon the lord mayor, aldermen, and burgesses of Dublin by charter or statute.

Special powers to enter premises, examine weights, and regulate the hawking of coal, are given to the Lord Mayor by 12 & 13 Vict. c. 97, sects. 94–97.

Short titles.

39. This Act may be cited as the Weights and Measures Act, 1889; and the principal Act and this Act may be cited together as the Weights and Measures Acts, 1878 and 1889.

FIRST SCHEDULE.

[Author's notes are inserted in square brackets.]

[For the original Schedule now repealed is substituted the list of fees settled by the Order in Council dated 21st December, 1907. Sect. 13, *ante*, p. 215. Sect. 9 (1904), *post*, p. 246.]

Fees to be taken on the verification and stamping of weights, measures, and weighing instruments by inspectors of local authorities.

Imperial Weights and Measures.

	s.	d.
Measures of Length:		
Each measure above 10 feet, when not sub-divided .	0	3
Each measure above 3 feet or a yard and not exceeding 10 feet, when not sub-divided	0	2
Each measure not exceeding 3 feet or a yard, when not sub-divided	0	1
Each sub-divided measure, including the whole length—		
Above 10 feet	1	0
„ 1 yard and not exceeding 10 feet . .	0	4
Not exceeding 1 yard	0	2
Measures of Capacity (Liquid, Dry, and Apothecaries'):		
Each measure when not sub-divided—		
Above 7 gallons	0	6
„ 2 gallons and not exceeding 7 gallons . .	0	4
„ ½ gallon „ „ „ 2 gallons . .	0	2
„ 1 pint „ „ „ ½ gallon . .	0	1
Not exceeding 1 pint	0	0½
Each sub-divided Liquid or Apothecaries' measure, including the whole capacity—		
Above 8 gallons—		
When the number of sub-divisions does not exceed 6	1	6
When the number of sub-divisions exceeds 6, then for each additional 6 sub-divisions or any number less than 6	0	6
Above ½ gallon and not exceeding 8 gallons—		
When the number of sub-divisions does not exceed 6	1	0
When the number of sub-divisions exceeds 6, then for each additional 6 sub-divisions or any number less than 6	0	4
Above 1 pint and not exceeding ½ gallon—		
When the number of sub-divisions does not exceed 6	0	3
When the number of sub-divisions exceeds 6, then for each additional 6 sub-divisions or any number less than 6	0	1
Not exceeding 1 pint—		
When the number of sub-divisions does not exceed 6.	0	2
When the number of sub-divisions exceeds 6, then for each additional 6 sub-divisions or any number less than 6	0	0½

Avoirdupois and Grain weights:	£	s.	d.
Each weight above 56 lb.		0	6
" " " 20 lb. and not exceeding 56 lb.		0	3
" " " 5 lb. " " " 20 lb.		0	2
" " " 8 oz. " " " 5 lb.		0	1
" " of ½ dr. " " " 8 oz.		0	0½
Grain weights, each		0	1

Troy and Apothecaries' weights:			
Each weight above 50 oz.		0	4
" " " 5 oz. and not exceeding 50 oz.		0	2
" " not exceeding 5 oz.		0	1

Weighing instruments:

Capacity—			
Above 25 tons and not exceeding 50 tons	1	0	0
When the capacity exceeds 50 tons, then for each additional 25 tons, or part of 25 tons		2	6
Above 10 tons and not exceeding 25 tons		15	0
" 5 tons " " " 10 "		10	0
" 1 ton " " " 5 "		5	0
" 5 cwt. " " " 1 ton		2	6
" 1 cwt. " " " 5 cwt.		1	6
" 56 lb. " " " 1 cwt.		1	0
In addition to the repayment of the actual cost of cartage, carriage, and lifting of standards and travelling expenses paid by the Inspector in each of the above cases.			
Above 14 lb. and not exceeding 56 lb.		0	6
" 1 lb. " " " 14 lb.		0	3
Not exceeding 1 lb.		0	2

Where a weighing machine has two sets of graduations, one imperial and the other metric, two separate fees are payable. Where two weigh tables or platforms are connected to one steelyard or office mechanism, two separate fees, in accordance with the capacities of the respective weigh tables or platforms, are payable. In the case of an instrument constructed also to calculate and indicate the price in money, an additional fee is payable for the examination of the attached price indicating mechanism equal in amount to that charged on the weighing instrument.

METRIC WEIGHTS AND MEASURES.

Measures of Length:

	s.	d.
Each measure when not sub-divided—		
Above a double metre or 2 metres	0	3
Above a metre and not exceeding a double metre or 2 metres	0	2
Not exceeding a metre	0	1
Each sub-divided measure, including the whole length—		
Above a double metre or 2 metres	1	0
Above a metre and not exceeding a double metre or 2 metres.	0	4
Not exceeding a metre	0	2

Measures of Capacity and Cubic Measure:

Each measure when not sub-divided—		
Above 10 litres (dekalitre)	0	4
Above 2 litres and not exceeding 10 litres . .	0	2
Above 0·5 litre and not exceeding 2 litres . .	0	1
Not exceeding 0·5 litre or 500 cubic centimetres .	0	0
Each sub-divided measure, including the whole capacity—		
Above 2 litres—		
When the number of sub-divisions does not exceed 10	1	
When the number of sub-divisions exceeds 10, then for each additional 10 sub-divisions or any number less than 10	0	4
Above 0·5 litre or 500 cubic centimetres and not exceeding 2 litres—		
When the number of sub-divisions does not exceed 10	0	3
When the number of sub-divisions exceeds 10, then for each additional 10 sub-divisions or any number less than 10.	0	1½
Not exceeding 0·5 litre or 500 cubic centimetres—		
When the number of sub-divisions does not exceed 10	0	2
When the number of sub-divisions exceeds 10, then for each additional 10 sub-divisions or any number less than 10	0	1

	£	s.	d.
Weights;			
Each weight above 5 kilograms		0	3
" " " 2 kilograms and not exceeding 5 kilograms		0	2
Each weight not exceeding 2 kilograms . . .		0	1
Weighing instruments;			
Capacity—			
Above 25 tonnes (25,000 kilograms) and not exceeding 50 tonnes (50,000 kilograms) .	1	0	0
When the capacity exceeds 50 tonnes (50,000 kilograms), then for each additional 25 tonnes (20,000 kilograms) or part of 25 tonnes .		2	6
Above 10 tonnes (10,000 kilograms) and not exceeding 25 tonnes		15	0
Above 5 tonnes (5000 kilograms) and not exceeding 10 tonnes		10	0
Above 1 tonne (1000 kilograms) and not exceeding 5 tonnes		5	0
Above 250 kilograms and not exceeding 1 tonne .		2	6
Above 50 kilograms and not exceeding 250 kilograms		1	6
Above 25 kilograms and not exceeding 50 kilograms		1	0
In addition to the repayment of the actual cost of cartage, carriage, and lifting of standards and travelling expenses paid by the Inspector in each of the above cases.			
Capacity—			
Above 5 kilograms and not exceeding 25 kilograms.		0	6
Above 0·5 kilogram and not exceeding 5 kilograms.		0	3
Not exceeding 0·5 kilogram		0	2

Where a weighing instrument has two sets of graduations, one metric and the other imperial, two separate fees are payable. Where two weigh tables or platforms are connected to one steelyard or office mechanism, two separate fees, in accordance with the capacities of the respective weigh tables or platforms, are payable. In the case of an instrument constructed also to calculate and indicate the price in money, an additional fee is payable for the examination of the attached price indicating mechanism equal in amount to that charged on the weighing instrument.

SECOND SCHEDULE.

[Sect. 19, *ante*, p. 217.]

Townships in Ireland for which Inspectors of Weights and Measures are to be appointed.

Blackrock; Dalkey; Kilmainham, New; Kingstown; Pembroke; Rathmines and Rathgar.

THIRD SCHEDULE.

[Sect. 21, *ante*, p. 219.]

Weight Ticket or Consignment Note on Delivery of Coal over Two Hundredweight.

Mr. *A.B.* [*here insert the name of the buyer*].

Take notice that you are to receive herewith tons cwt. lbs. of coal.

[*When sold in sacks, add*]

in sacks, each containing cwt.

[*When sold in bulk, add*]

	tons.	cwt.	lbs.
Weight of coal and vehicle . .			
Tare weight of vehicle . . .			
Net weight of coal herewith delivered to purchaser			

C.D. [*here insert the name of the seller*].

E.F. [*here insert the name of the person in charge of the vehicle*].

Where coal is delivered by means of a vehicle, the seller must deliver or send by post or otherwise to the purchaser or his servant, before any part of the coal is unloaded, a ticket or note in this form.

Any seller of coal who delivers a less quantity than is stated in this ticket or note is liable to a fine.

Any person attending on a vehicle used for the delivery of coal who, having received a ticket or note for delivery to the purchaser, refuses or neglects to deliver it to the purchaser or his servant, is liable to a fine.

[It is unnecessary to insert the Fourth or Fifth Schedules, as their contents have been noted in the appropriate places in the text.]

THE WEIGHTS AND MEASURES (PURCHASE) ACT, 1892.

55 & 56 Vict. c. 18.

An Act for authorizing county and borough councils to purchase franchises of weights and measures. Be it enacted, etc.

[20th June, 1892.]

Power for county or borough council to purchase franchise of weights and measures.

1.—(1) Where the council of a county or borough are the local authority for the execution of the law relating to weights and measures, the council and the owner of any franchise of weights and measures may, with the approval of the Board of Trade, enter into and carry into effect any agreement for the sale to and purchase by the council of all or any of the powers and authorities of the franchise owner within the area under the council as such local authority, and on any such purchase being completed the powers and authorities purchased shall cease to be exercised.

(2) For the purpose of any such purchase the Lands Clauses Acts shall be incorporated with this Act, except the provisions of those Acts with respect to the purchase and taking of land otherwise than by agreement, and the franchise shall be deemed land within the meaning of those Acts.

(3) A county council may borrow money for the purposes of this Act in accordance with the Local Government Act, 1888 [51 & 52 Vict. c. 41.], and a borough

council may borrow money for the purposes of this Act in accordance with the Public Health Act, 1875 [38 & 39 Vict. c. 55].

(4) The expenses incurred by a borough council under this Act shall be defrayed out of the borough fund or borough rate, and any money borrowed by such a council shall be borrowed on the security of the borough fund or borough rate.

(5) For the purposes of this Act the expression "franchise of weights and measures" shall include the authority which any court-leet for any hundred or manor, or any jury or ward inquest, or the lord or lady of any manor, or any other person, may have for inspecting, examining, regulating, verifying, stamping, adjusting, seizing, breaking, or destroying any weights or measures, or weighing instrument or measuring instrument.

Provision as to certain boroughs.

2. Where the council of a county have in pursuance of this Act acquired any franchise of weights and measures in respect of any area within a borough the council of which are not at the time of such acquisition the local authority for the execution of the law relating to weights and measures, the council of that borough shall not become such a local authority until they have recouped to the council of the county such proportion of the expenses of the county council in acquiring the franchise and in executing the law relating to weights and measures as may be agreed on between the respective councils, or may, in case of difference, be determined by the Board of Trade.

Extent of Act.

3. This Act shall not extend to Scotland or Ireland.

Short title and construction.

4. This Act may be cited as the Weights and Measures (Purchase) Act, 1892, and shall be read as one with the Weights and Measures Acts, 1878 and 1889.

THE WEIGHTS AND MEASURES ACT, 1893.

56 & 57 Vict. c. 19.

An Act to amend the law relating to weights and measures. Be it enacted, etc. [29th June, 1893.]

Relief of certain boroughs from contribution to county expenses.

1. Where the mayor, aldermen, and burgesses of a borough, not being a county borough, and not having a separate court of quarter sessions, were, on the 1st day of January, 1893, the legally constituted local authority for the purposes of the Weights and Measures Acts, 1878 to 1892, or for the execution of the law relating to weights and measures under any local Act, they shall be paid by the county council of the county in which the borough is situate, once in every year, the proportionate amount contributed towards the expenses incurred by the county council in the execution of those Acts by the several parishes and parts of parishes within the borough, such proportion being calculated according to the values stated in the basis for county rates in force for the time being.

Provided that when the amount received by a county council from the execution of those Acts is in excess of the expenditure thereupon, a proportionate part of such excess amount shall be deducted from any sum due to such borough as a recoupment under the Contagious Diseases (Animals) Acts, or the Sale of Food and Drugs Acts respectively.

Short title and construction.

2. This Act may be cited as the Weights and Measures Act, 1893, and shall be read as one with the Weights and Measures Acts, 1878 to 1892.

Commencement.

3. This Act shall come into operation on the 1st day of April, 1894.

THE WEIGHTS AND MEASURES (METRIC SYSTEM) ACT, 1897.

60 & 61 Vict. c. 46.

An act to legalize the use of weights and measures of the metric system. Be it enacted, etc. [6th August, 1897.]

Use of metric weights and measures in trade.

1. Notwithstanding anything in the Weights and Measures Act, 1878 [41 & 42 Vict. c. 49], the use in trade of a weight or measure of the metric system shall be lawful, and nothing in section 19 of that Act shall make void any contract, bargain, sale, or dealing, by reason only of its being made or had according to weights or measures of the metric system, and a person using or having in his possession a weight or measure of the metric system shall not by reason thereof be liable to any fine.

Metric standards and equivalents.

2.—(1) The Board of Trade standards which may be made under section 8 of the Weights and Measures Act, 1878 [41 & 42 Vict. c. 49], shall include metric standards derived from the iridio-platinum linear standard metre and iridio-platinum standard kilogram deposited with the Board of Trade and numbered 16 and 18 respectively.

(2) It shall be lawful for the Queen by Order in Council to make a table of metric equivalents in substitution for the table in Part I. of the Third Schedule to the Weights and Measures Act, 1878, and, as from the date at which the Order in Council comes into operation, Par. I. of the said schedule and sections 18 and 38 of the said Act shall be repealed.

Short title.

3. This Act may be cited as the Weights and Measures (Metric System) Act, 1897, and may be cited with the Weights and Measures Acts, 1878 to 1893.

THE WEIGHTS AND MEASURES ACT, 1904.

4 Edw. VII. c. 28.

Short title.

1. This Act may be cited as the Weights and Measures Act, 1904.

Construction.

2. This Act shall be construed as one with the Weights and Measures Acts, 1878 and 1889 [41 & 42 Vict. c. 49, 52 & 53 Vict. c. 21], and the Weights and Measures Acts, 1878 to 1897, and this Act may be cited collectively as the Weights and Measures Acts, 1878 to 1904.

Definitions.

3. In this Act, unless the context otherwise requires—

The expression "the Weights and Measures Acts" means the Weights and Measures Acts, 1878 and 1889, and this Act:

The expression "the principal Act" means the Weights and Measures Act, 1878:

The expression "the Act of 1889" means the Weights and Measures Act, 1889.

Commencement.

4. This Act shall come into operation on 1st January, 1905.

Powers of Board of Trade as to general regulations.

5.—(1) The Board of Trade may make general regulations (herein-after referred to as "the Board of Trade Regulations") with respect to—

(*a*) the verification and stamping of weights and measures and weighing and measuring instruments, including the prohibition of stamping in cases where the nature, denomination, material, or instrument appears likely to facilitate the perpetration of fraud; and

(*b*) the circumstances and conditions under which, and the manner in which, stamps may be obliterated or defaced; and

(*c*) the tests to be applied for the purpose of ascertaining the accuracy and efficiency of weights and measures and weighing and measuring instruments; and

(*d*) the limits of error to be allowed on verification and to be tolerated on inspection either generally or as respects any trade;

and generally for the guidance of local authorities in the execution and performance of their powers and duties under the Weights and Measures Acts.

(2) Any such regulations may confer on local authorities power to make special regulations as respects their areas in relation to the inspection of weights and measures and weighing instruments, and to other matters which, having due regard to uniformity of administration, appear to the Board of Trade to be matters which can be better regulated by special regulations.

(3) The Board of Trade regulations shall as soon as may be after they are made, be laid before Parliament, and shall have effect as if enacted in this Act.

(4) If any inspector refuses or wilfully neglects to act in compliance with the Board of Trade regulations, he shall be guilty of an offence under sect. 49 of the principal Act.

(5) As from the date when the Board of Trade regulations first made under this section came into force, the enactments mentioned in Part I. of the schedule to this Act shall be repealed to the extent specified in the third column of that schedule, and any general regulations and bye-laws made thereunder shall cease to have effect.

This section supersedes sect. 53 of the Act of 1878, and sect. 9 of the Act of 1889, which gave the local authorities power to make bye-laws and regulations for directing the inspectors in the performance of their duties. In order to promote uniformity regulations are now

made dealing with matters enumerated in pars. (*a*) to (*d*) of sub-sect. (1). These are made primarily for the guidance of the inspectors, and so long as they are confined to those subjects have statutory effect. It will be observed that these four paragraphs deal entirely with the examination testing and stamping of weighing and measuring appliances so as to ensure uniformity.

Besides the above subjects the Regulations may also be "generally for the guidance of local authorities in the execution and performance of their powers and duties" under the Acts. There is no power given to the Board of Trade to impose any new duties or give any new powers to the local authorities. Regulations therefore can only deal with the performance of duties or the exercise of powers already existing. These may be combined and published with the regulations directed to inspectors. But the power to make bye-laws and regulations for inspectors has been expressly taken away from the local authorities, therefore there does not appear to be any power on the part of the Board of Trade to direct the local authorities to issue any particular form of instructions to their inspectors.

But sub-sect. (2) above takes the place of the superseded sections and allows the local authorities with the consent of the Board of Trade to make special (as distinguished from general) regulations in certain cases and with regard to matters not within pars. (*a*) to (*d*) above. Such matters as testing on manufacturers' premises, number of visitations, etc., which vary according to local conditions, appear to come within the sub-section.

The Regulations which came into force on 1st October, 1907, are set out, *post*, p. 250, and "Instructions," *post*, p. 307. The latter have not statutory effect as regulations, but are to be followed in so far as they consist of a summary of the provisions of the Acts. In many instances they are valuable for general guidance and information, and in some cases might properly have been included in the Regulations.

In Ireland under the repealed sections the Inspector General of Constabulary with the approval of the Lord Lieutenant, as a person having power to appoint inspectors, was the authority to make the General Regulations. The General Regulations so made ceased to have effect from 1st October, 1907, when the Board of Trade Regulations came into force. The Board of Trade Regulations, however, have effect as if enacted in the Act of 1904, and therefore are binding on *ex-officio* inspectors, as they direct the tests to be employed; there was therefore no necessity for the intervention of the Inspector General in the making of the regulations. The carrying out of the Regulations is now part of the duty of *ex-officio* inspectors by statute and therefore is to be done "under the direction of the justices of petty sessions" (under sect. 81 of the Act of 1878 (*ante*, p. 191), which is to be construed as one with the Acts of 1889 and 1904 (sect 2, *ante*, p. 240).

Power of Board of Trade to grant certificates of suitability for use of appliance, etc.

6. It shall be the duty of the Board of Trade to examine and test, with reference to the material of which and the principle on which they are constructed, all such patterns of weights and measures and weighing or measuring instruments for use for trade as may be submitted to them by local authorities or manufacturers of or dealers in weights, measures, or weighing or measuring instruments. If upon such examination any such pattern is found not to be such as to facilitate the perpetration of fraud the Board of Trade shall give a certificate to that effect and shall cause such pattern to be stamped with an appropriate mark, and from and after the granting of such certificate an inspector shall not refuse to verify or stamp any weight or measure or weighing or measuring instrument made in accordance with that pattern on the ground that the material or principle of construction is such as to facilitate the perpetration of fraud. If upon such examination the Board of Trade decline to give such a certificate as aforesaid no weight or measure or weighing or measuring instrument made in accordance with such pattern shall be deemed legal and no inspector shall verify or stamp any such weight, measure, or instrument.

The power to take fees conferred by sect. 8 of the Act of 1889 shall extend to the taking of fees for examinations and tests made under this section. *Ante*, p. 213.

The purpose of this Act is to centralize the system of examining and verifying weights, measures, and weighing instruments. Under the Act of 1889, the responsibility of determining whether weighing instruments facilitated the perpetration of fraud was cast on the local authorities; it is now transferred to the Board of Trade.

The fees for examinations and tests under this section are set out, *post*, p. 394.

The section requires the Board of Trade to examine and test as to "the *material* of which and the *principle* on which" the articles submitted to them are constructed, in order to determine where it is a *pattern or type* that should be used in trade. It does not require testing

for accuracy, sensitiveness, etc. Weighing instruments might be of a suitable type but when submitted might be out of adjustment. Such do not appear to come within this provision. If an instrument on being tested is found incorrect it does not follow that the type is wrong, or the principle on which it is constructed. The liability to be easily put out of order is to be considered in relation to the principle of construction.

Powers of Board of Trade to determine question.

7.—(1) If any difference arises between any inspector of weights and measures and any other person as to the meaning or construction of the Board of Trade regulations, or as to the method of testing or verifying any weight, measure, weighing or measuring instrument, such difference shall, on the request of either party, be determined by the Board of Trade, whose decision shall be final.

(2) The Court before whom any proceedings under the Weights and Measures Acts are being taken shall, at the request of either party, and may, if they think fit to do so, without any such request, refer to the Board of Trade the question of the accuracy or efficiency of any weight, measure, or weighing or measuring instrument, the accuracy or efficiency of which is in dispute, and the decision of the Board of Trade shall be final; and any expenses incurred by the Board of Trade in making any test for the purpose shall be paid by the complainant or defendant as the Court may by order direct.

(3) The Board of Trade Arbitrations, &c., Act, 1874 [37 & 38 Vict. c. 43], shall apply as if this Act were a special Act within the meaning of the first-mentioned Act.

Sub-section (1) excludes from the Courts the determination of any of the questions therein mentioned. The second sub-section in all prosecutions leaves to the Court the decision as to the accuracy of a weight or measure only in those cases in which the Court and both parties are willing that the issue should be so tried.

The powers of the Board of Trade as to an inquiry are conferred by section 2 of the Board of Trade Arbitrations, &c., Act, 1874, which is in the following terms:—" Where under the provisions of any special Act, . . . the Board of Trade are required or authorized to sanction,

approve, confirm, or determine any appointment, matter or thing, or to make any order, or to do any other Act or thing for the purposes of such special Act, the Board of Trade may make such inquiry as they may think necessary for the purpose of enabling them to comply with such requisition or exercise such authority."

"Where an inquiry is held by the Board of Trade for the purposes of this section, or in pursuance of any general or special Act . . . directing or authorizing them to hold any inquiry, the Board of Trade may hold such inquiry, by any person or persons duly authorized in that behalf by an order of the Board of Trade, and such inquiry if so held shall be deemed to be duly held."

Section 3 of the same Act authorizes the Board of Trade to require, at the time of the application to them, the parties to pay money on account of expenses of the inquiry; and the cost of the inquiry must be paid by the parties as the Board of Trade may direct.

Qualification for appointment as inspector of weights and measures.

8.—(1) The Board of Trade shall provide for the holding of examinations for the purpose of ascertaining whether applicants for the post of inspector under a local authority nominated by that authority possess sufficient practical knowledge for the proper performance of the duties of inspectors of weights and measures, and for the grant of certificates to persons who satisfactorily pass such examinations.

(2) A person shall not be appointed to act as an inspector of weights and measures unless he has obtained such a certificate as aforesaid, and the appointment of any person as inspector made after the commencement of the Act of 1889 but before the commencement of this Act shall, unless before the commencement of this Act he has obtained a certificate under sect. 11 of the Act of 1889, be null and void.

(3) If any person not being an inspector duly appointed under the Weights and Measures Acts acts as such inspector, or if any person having been appointed an inspector after the commencement of the Act of 1889 acts as an inspector without having obtained a certificate either under sect. 11 of that Act or under this section, he shall

be liable to a fine not exceeding £10, or in the case of a second or subsequent offence £20.

(4) Sub-section (3) of sect. 11 of the Act of 1889 shall apply to the charging and application of fees in respect of examinations under this section, and sub-sections (1) and (2) of the said sect. 11 shall be repealed.

It was held under an enactment similar to sub-section (3) above in sect. 11 of the Act of 1889 (now repealed) that an inspector (who had been appointed but had not obtained a certificate) was only prohibited from acting *as an inspector*; hence such an inspector might lay an information as a common informer: *Crabtree* v. *Bulman*, 4 M. R. 152.

The foregoing section requires the examination to be passed before the candidate is appointed an inspector. It replaces sub-sections (1) and (2) of sect. 11 of the Act of 1889, and now sub-section (3) of that section, *ante*, p. 214, is to be read as if it were part of the above section.

By Order of the Board of Trade of 28th December, 1904, the fee for this examination was fixed at £1 10*s*.

Fees for verification and stamping.

9. It shall be lawful for His Majesty, by Order in Council, to specify new fees to be paid in respect of the verification and stamping of weights, measures, and weighing and measuring instruments in substitution for the fees specified in the First Schedule to the Act of 1889, and, as from the date on which the Order in Council comes into operation, the enactment mentioned in Part II. of the Schedule to this Act shall be repealed to the extent specified in the third column to that schedule. Any Order in Council so made may be varied or revoked by a subsequent Order in Council.

The last Order in Council under this section was made 21st December, 1907, and is set out, *ante*, pp. 231–234.

Forging of stamps.

10.—(1) Any person who removes a stamp from any weight or measure or weighing or measuring instrument, and inserts the same into another weight or measure or weighing or measuring instrument, shall be deemed to

forge or counterfeit a stamp within the meaning of sect. 32 of the principal Act. *Ante*, p. 162.

(2) Such of the provisions of the said section as impose penalties on any person who wilfully increases or diminishes a weight after it has been stamped, or who knowingly uses, sells, utters, disposes of, or exposes for sale a weight so increased or diminished, shall apply to measures in like manner as they apply to weights.

The wording of sub-section (2) implies that there is no corresponding penalty under sect. 32 of the Act of 1878, in the case of a weighing instrument, if it is wilfully altered so as to become unjust.

Explanation of the law as to bakers.

11. Nothing in the enactments referred to in the Fourth Schedule to the Act of 1889 shall render any baker or seller of bread or journeyman servant or other person employed by such baker or seller of bread liable to any forfeiture or penalty for weighing any bread conveyed or carried out in any cart or other carriage by means of any of the instruments for weighing included in the definition "weighing instrument" in sect. 35 of the Act of 1889.

The enactments here alluded to are sect. 9 of 3 Geo. 4, c. cvi., and sect. 7 of 6 & 7 Will. 4, c. 37, which are set out, *post*, p. 336.

Verification and stamping by local inspectors of weights and measures.

12. The provisions of sect. 44 of the principal Act shall apply to the verification and stamping, in accordance with the Board of Trade Regulations, of weighing instruments used for trade in like manner as they apply to the verification and stamping of weights and measures, and for the purposes of those provisions as so amended any person having his principal place of business within any district shall be deemed to reside in that district, although he in fact is not resident there. *Ante*, p. 170.

Amendments.

13.—(1) Section 28 of the principal Act shall have effect as if in the second paragraph thereof the words "length or" were inserted before the word "capacity."

(2) Sub-section 4 of sect. 57 of the principal Act shall have effect as if the words "unless such informer is an inspector of weights and measures" were inserted after the word "informer."

(3) In sect. 4 of the Act of 1889 the word "any" shall be substituted for the words "second or subsequent."

(4) Section 7 of the Act of 1889 shall have effect as if before the words "provide for" there were inserted the words "and if so directed by the Board of Trade shall."

(5) In sect. 13 of the Act of 1889 for the words "no discount shall be allowed" there shall be substituted the words "no discount, commission, or rebate of any kind shall be given nor any allowance made by such inspector or by the local authority for the use of tools, premises, machinery, or instruments or assistance rendered for the purposes of such verification and stamping, except when such verification and stamping take place on the premises of a glass or earthenware manufacturer, in which case such adequate and reasonable allowance as may be agreed upon by the local authority, with the consent of the Board of Trade, may be made in respect of such use or assistance as aforesaid."

These amendments have been embodied in the respective sections.

Power for inspectors to prosecute.

14. An inspector of weights and measures may, with the consent of the local authority, prosecute before a court of summary jurisdiction or justices any information, complaint, or proceeding arising under the Weights and Measures Acts, or in the discharge of his duties as such inspector.

In England it has been a matter of doubt whether an inspector could prosecute on behalf of his local authority, although in *Duncan* v. *Toms* (56 L. J. M. C. 81) it was held that an officer of the Society for Prevention of Cruelty to Animals could conduct a prosecution on behalf of the society. This section was passed to remove those doubts.

Prosecutions under these Acts are part of the administration of the Criminal Law and could always be conducted by the same persons as other prosecutions. In Ireland the *ex-officio* inspectors prosecute in the character of police rather than in that of an inspector.

The word "consent" means a general consent for a particular inspector to conduct prosecutions when cases arise; it is not necessary that there be a distinct consent in each case. The section provides that an inspector is a person who may conduct prosecutions if the local authority consent to his doing so: *Tyler* v. *Ferris*, 1906, 1 K. B. 94.

15. Section 45 of the principal Act shall apply to weighing instruments in like manner as it applies to weights and measures. Amendment. *Ante*, p. 172.

16. The definition of "weighing instrument" in sect. 35 of the Act of 1889 shall include a weighing instrument constructed to also calculate and indicate the price in money. Amendment. *Ante*, p. 228.

SCHEDULE.

[Enactments repealed as from the dates when the Board of Trade Regulations, and the Order in Council fixing new fees respectively came into force. These have been noted in the text.]

THE WEIGHTS AND MEASURES REGULATIONS, 1907,

MADE BY THE

BOARD OF TRADE

Pursuant to the Weights and Measures Act, 1904.

[NOTE.—The numbered notes are by the author, and are not part of the Regulations.]

GENERAL PROVISIONS.

1. These Regulations[1] may be cited as the Weights and Measures Regulations, 1907.

[1] As to the general scope and effect of these Regulations, *see* notes to sect. 5 of the Act of 1904, *ante*, p. 247.

2. These Regulations shall come into force on the 1st day of October, 1907.

3. In the construction[1] of these Regulations—

"the date of these Regulations" means the 1st day of October, 1907.

"capacity" in reference to a weighing instrument means the maximum load which it is constructed to weigh.

"instrument" means weighing instrument,[2] but includes measuring instrument[3] where the wider meaning is not excluded by the context.

"requirements of these Regulations" includes requirements of the Weights and Measures Acts.

"correct" in reference to a weight or measure or instrument means correct within the limits of error specified in the Tables, where not repugnant to the context.

"error" in reference to an instrument includes deficiency in sensitiveness, where not repugnant to the context.

"authority" means the local authority or such other authority as has jurisdiction under the Weights and Measures Acts, 1878 to 1904, in respect of the matters dealt with in any Regulation.

[1] Section 31 of the Interpretation Act, 1889 (52 & 53 Vict. c. 63), provides:—"Where any Act, whether passed before or after the commencement of this Act, confers power to make, grant, or issue any instrument, that is to say, any Order in Council, order, warrant, scheme, letters patent, rules, regulations, or bye-laws, expressions used in the instrument, if it is made after the commencement of this Act, shall, unless the contrary intention appears, have the same respective meanings as in the Act conferring the power." These definitions therefore govern the interpretation of their respective words in these Regulations even if they differ from the meaning of the same words as used in the Acts when it would be a case of "contrary intention" appearing. But no definition of a word in these Regulations can affect its meaning as used in an Act.

[2] "Weighing instrument" is defined by sect. 35 of the Act of 1889 (*ante*, p. 228), and sect. 16 of the Act of 1904 (*ante*, p. 249).

[3] "Measuring instrument" is defined by sect. 35 of the Act of 1889.

4. On the appointment of an inspector by the authority, or the termination of the appointment of an existing inspector, the authority shall give notice thereof to the Board of Trade. Provided that in Ireland in the case of ex-officio inspectors a transfer from one district to another need not be notified.

5. Sets of local standards shall be provided by the authority sufficient for the requirements of the district.[1] All standards shall be of material and form approved by the Board of Trade.

One set of the local standards shall be kept apart, and used only for the verification[2] of working standards[3] and

for the re-verification of duplicate local standards, where such are provided.

New local standard avoirdupois weights, 56 lb. to $\frac{1}{2}$ dram inclusive (except the 50, 20, 10, 5 lb. octagonal weights), shall be in all cases of spherical shape.

[1] This is merely a re-statement of sect. 40 of the Act of 1878, *ante*, p. 166.

[2] Verification is done by the Board of Trade under sects. 37 & 41 of the Act of 1878, *ante*, pp. 165, 167.

[3] These are provided under sect. 7 of the Act of 1889, *ante*, p. 212, and also scale-beams of sufficient delicacy to effect the verification here required. The Board of Trade may direct this to be done when they consider it necessary (sect. 13 (4) of Act of 1904, *ante*, p. 248).

6. The inspector shall be provided[1] with working standards, scale-beams, and balances for testing weights, adequate instrumental equipment, and travelling kit for inspection, of such material and form as may from time to time be approved by the Board of Trade.

The inspector's equipment shall include pipettes or small glass tubes or measures graduated into grains or minims, and grain weights, 100 grains down to $\frac{1}{100}$th grain, for making tests for sensitiveness and error.

Where a large amount of working standards is required, as in the testing of weighbridges, the authority shall provide[1] a quantity of not less than one ton, and a vehicle for carrying them when necessary.

All scale-beams and balances for the use of an inspector in the inspection and verification of weights for use in trade shall bear the stamp of the Board of Trade, and shall be submitted for re-verification once at least in every five years.

[1] The Board of Trade have no power to create duties to be discharged by the Local Authorities. The Regulations are directed in the first instance to the inspectors (sect. 5 (3) of the Act of 1904) and are for the "guidance" of the Local Authorities, that is, for their aid and assistance. This provision and many similar ones are of this nature. In the present case the duty of providing all necessary means for verification is cast on the Local Authorities by sect. 40 of the Act of 1878 (*ante*, p. 166), and this regulation is one of those which direct the authorities how to discharge their statutory duties.

7. The inspector shall be provided by the authority [1] with such dies, punches, stencil plates, branding irons, etching and engraving implements, sand-blasting machinery, and other implements, as may be necessary for affixing the local verification stamp, the design and number of which are furnished by the Board of Trade.

For obliterating stamps, the authority shall provide punches, of suitable sizes, of a six-pointed star design, as shown in the illustration below :—

[1] Note to Reg. 6 applies here.

8. The inspector shall be provided by the authority [1] with an adequate office, to the satisfaction of the Board of Trade, together with cases or presses for the due security of his standards, instruments, and books.

Unless no other suitable premises are available, a stamping office, whether temporary or otherwise, shall not be on premises where intoxicating liquors are sold, or where retail trade is carried on, and it shall be selected as far as possible with a view to freedom from vibration.

[1] Note to Reg. 6 applies here.

9. It will be the duty [1] of the authority to arrange that the premises of every trader in the district are visited by an inspector for the purpose of inspecting all weights, measures, and instruments in use for trade at least once a year.

Provided, nevertheless, that the authority may, with the sanction of the Board of Trade, extend such period to not more than two years, with respect to the whole or some part of their area or to certain trades.

Arrangements shall also be made for special surprise visits from time to time.

[1] It is not clear that any Act imposes any limit of time between one inspection and the next. It appears that the frequency of the inspector's visits was left to the Local Authorities to determine in view of their responsibilities to the public whom they represented, and to be carried out by a bye-law under sect. 53 of the

Act of 1878. On the other hand, sect. 53 of the Act of 1878 is repealed as from 1st October, 1907, when these Regulations came into force. As these Regulations are to have effect as if enacted in the Act, it would appear that in this case this regulation is of statutory force, and that the scope of the Regulations extends to include anything with respect to which a bye-law could have been made under sect. 53 of the Act of 1878.

10. The authority shall cause the inspector to make annual reports as to inspection and verification in the form given in Tables A and B, or in such other form as may be from time to time approved by the Board of Trade.[1]

Copies of such annual reports shall be sent to the Board of Trade by the authority not later than the 30th day of September in any year.

[1] The note to Reg. 9 applies to this Regulation. The second paragraph of it would not have come within sect. 53 of the Act of 1878.

11. All weights, measures, and instruments shall be tested[1] in a clean condition, and, if necessary, the inspector shall call upon the owner or user to clean them.

[1] This obviously refers to testing for purposes of verification and not the case of an inspection and test for the purpose of finding out if the weight is being used to commit fraud.

12. Subject to the provisos at the end of this Regulation the inspector, on inspection, shall obliterate the stamp—

(*a.*) on any weight, measure, or instrument which is such that it cannot be stamped or re-stamped under these Regulations,[1] and cannot be made to conform to the requirements of these Regulations;

(*b.*) on a measure of length, if the deficiency or excess exceeds four times the amount allowed on verification;[2]

(*c.*) on a measure of capacity[3] (other than an apothecaries' measure), if the error in deficiency[3] is more than half that allowed in excess on verification, or if the error in excess is more than that allowed on verification;[4] and, on apothecaries

glass measures, if the error is greater than that allowed on verification; [5]

(*d.*) on a weight,[6] if the error in deficiency is more than half that allowed in excess on verification, or if the error in excess is more than that allowed on verification;

(*e.*) on a weight or measure if, owing to its being broken, much indented or otherwise, it does not admit of proper adjustment;

(*f.*) on a weight or measure which, since the last stamping, has been repaired, or re-adjusted;

(*g.*) on a weighing instrument, if the error exceeds twice, or if the deficiency in sensitiveness exceeds three times the amount allowed on verification; [7]

(*h.*) on a weighing instrument used for one of the special trades of the first class hereinafter mentioned,[8] if the error exceeds twice, or if the deficiency in sensitiveness exceeds three times the amount allowed on the verification of Class B instruments; [9]

(*i.*) on a weighing instrument used for one of the special trades of the second class hereinafter mentioned,[10] if the error, or the deficiency in sensitiveness, exceeds twice the amount allowed on the verification of Class C instruments; [11]

(*j.*) on an equal armed weighing instrument which, since the last stamping, has been repaired or adjusted; [12] and on any weighing instrument which, since the last stamping, has been so repaired or altered that it has become necessary to ascertain that the indications of the instrument remain correct throughout its range, as, for instance, when an instrument is altered in design or construction, or when new stays, levers, or springs are introduced.

Provided that where the incorrectness of a weight, measure, or instrument exceeds the limits laid down in this Regulation, but is not in the inspector's judgment such as to require the immediate obliteration of the stamp,[13] he shall

leave with the trader a notice calling on him to have the weight, measure, or instrument corrected within a stated period, not to exceed in any case 28 days, and shall obliterate the stamp if the correction has not been made within such period.

Provided, further, that where in a weighing instrument the incorrectness is due merely to a need for re-balancing the instrument, the stamp shall not be defaced.

Provided, further, that until the end of the period of two years after the date of these Regulations [14] in the case of a weighing instrument which was stamped and in use in any of the special trades hereinafter mentioned [15] before the date of these Regulations, the inspector shall not obliterate the stamp if the previously existing requirements are satisfied.

Provided, further, that where the Board of Trade disapprove of any pattern of weight, measure, or instrument under Section 6 of the Weights and Measures Act, 1904, the inspector shall not obliterate or deface the stamp on any such weight or measure or instrument which was stamped prior to such disapproval by reason only of such subsequent disapproval.

Provided, further, that where a duly stamped weight, measure, or instrument which has not been repaired, adjusted, or altered since stamping is found by an inspector to be correct within the limits laid down in this Regulation, he shall not obliterate or deface the stamp, but may at his discretion impress a date mark.[16]

[1] The articles mentioned in (*a*) and (*b*) of Reg. 14 below do not come within this definition, but they are subject to pars. (*b*) (*c*) . . . (*j*) and the provisos of this Regulation. Where such articles have the stamps obliterated under any provision in this Regulation, they may on re-adjustment be re-stamped under Reg. 14 (*b*) below.

[2] These amounts are given in Table I., *post*, p. 297, and Metric Table IX., *post*, p. 301.

[3] For metric measures see Tables X. and XI., *post*, p. 302.

[4] These limits are given in Table II. for liquid measures, *post*, p. 297, and Table IV. for dry measures, *post*, p. 299.

[5] See Table III., *post*, p. 298.

[6] See Tables V. to VIII., *post*, p. 299, and for metric weights Table XII., *post*, p. 303.

[7] These limits are given in Tables XIII., XIV., and XV., *post*, p. 304.

[8] These are dealers in gold, silver, precious metals and stones, jewellers, retail chemists, and silk merchants.

[9] See Table XIV., *post*, p. 304.

[10] These are retailers of tea, coffee, and tobacco.

[11] See Table XIV., *post*, p. 304.

[12] It is not possible to define what is included in the term "repaired or adjusted," it is evidently some alteration less than the alterations mentioned in the remainder of the Regulation, and something more than mere cleaning of the working parts. Perhaps the phrase includes the renewal of any part that would if improperly done affect the accuracy of its weighing, and any adjustment to compensate for previous inaccuracy in weighing.

[13] Until the Board of Trade provide tables showing at a glance the limits of error which entail obliteration of the stamp in each of the above cases the inspector must necessarily frequently have recourse to this proviso.

[14] This exemption lasts till 30th September, 1909, and applies to all instruments coming under pars. (*g*) to (*j*) above.

[15] These special trades are dealers in precious metals and precious stones, gold, silver, jewellers, retail chemists, silk merchants, and dealers in tea, coffee, or tobacco.

[16] With respect to this proviso the Board of Trade have notified the County Council of the East Riding of Yorkshire that "no stamping fees are payable on the re-verification of weights, measures, or instruments in those cases in which re-stamping is unnecessary. No fee can be charged for impressing a date mark. *See* note to sect. 44 of the Act of 1878, *ante*, p. 171.

13. Where a weight, measure, or instrument is brought by a trader to an inspector for re-verification, he shall deal with it in the same manner as upon inspection,[1] but need not, if he does not consider it necessary, test a glass or earthenware measure, unless the original stamp has been defaced.

Provided, nevertheless, that on such re-verification the limits of error shall be the same as on verification.

[1] The article or instrument is to be examined to ascertain if it complies with the provisions of the preceding Regulation; if found correct they are not to be re-stamped unless the original stamp be worn or defaced. A date mark may be impressed.

14. Before stamping[1] any weight, measure, or instrument the inspector shall ascertain that it complies with the requirements of these Regulations.

With reference to weights, measures, or instruments

already in existence at the date of these Regulations, which do not conform to the requirements of these Regulations, or of which the stamping is by these Regulations forbidden, but which conform to the requirements of Regulations previously in force, the following provisions shall have effect:—

(*a.*) Manufacturers' and dealers' stocks of such weights, measures, or instruments may be stamped until the end of the year 1907.

(*b.*) Any such weight, measure, or instrument, which has been stamped at any time prior to the 1st day of January, 1908, may, unless re-stamping is hereinafter expressly prohibited, be continued in use and be re-stamped from time to time during such period after the date of these Regulations as is hereinafter specified as the period of allowance,[2] or, where no such period is specified, during the period of 20 years from the date of these Regulations.

[1] "Stamping" here includes re-stamping.

[2] In the case of cased weights, or those composed of two or more different unalloyed metals, the period of allowance is until 30th September, 1909. The period for certain beam-scales with swan-neck ends specified in Reg. 76, *post*, p. 276, is 5 years, for accelerating counter machines the period is 10 years (Reg. 84, *post*, p. 277), for steelyards 5 years (Reg. 104, *post*, p. 282).

15. A weight, measure, or instrument presented for verification shall be complete in itself, and shall not bear a manufacturer's or maker's mark which might be mistaken for the inspector's stamp.

16. No weight, counterpoise, measure, or weighing instrument presenting any novel features, and no measuring instrument or price computing instrument, shall be stamped unless of a pattern approved by the Board of Trade under Section 6 of the Weights and Measures Act, 1904.

17. No weight, measure, or instrument shall be stamped which is not, in the opinion of the inspector, sufficiently strong to withstand the wear and tear of ordinary use in trade.

18. The denomination or capacity of a weight, measure, or instrument, if not marked in full, shall be indicated only by one of the abbreviations set out in Table C appended to these Regulations.[1]

[1] This table is set out, *post*, p. 296.

19. No new instrument, other than Class A beam-scales, shall be stamped unless provided by the manufacturer with a plug or stud of soft metal on which to place the inspector's stamp, such plug or stud being made irremovable by undercutting or in some other suitable manner.

20. The inspector shall stamp weights, measures, and instruments with a stamp of the uniform design issued by the Board of Trade, with the addition of the number or mark distinguishing the district.

All weights, measures (other than glass, earthenware, and enamelled-metal measures), and instruments shall, except where the small size renders it impracticable, have a date mark (indicating the date of stamping) marked on them by the inspector.

21. The inspector shall not stamp a glass or earthenware measure on the premises of the manufacturer or dealer, or on premises rented from the manufacturer or dealer, without the sanction of the Board of Trade.

22. The authority shall issue[1] to their inspectors the Instructions set out in the Schedule to these Regulations, with such modifications as may be made therein from time to time by the Board of Trade, and shall not issue any Instructions inconsistent therewith.

It will be the duty of the authority to see that their inspectors act in compliance with such Instructions.

[1] Under sect. 53 of the Act of 1878 power was given to the Local Authorities to make bye-laws "generally for regulating the duties under this Act of the Inspectors, etc.," and under sect. 9 of the Act of 1889 to make general regulations for the guidance of the inspectors. But both these enactments are now repealed and there is no statutory duty on the Local Authorities to direct

the conduct of the inspectors. The duty is now cast on the Board of Trade of directing them in certain cases under sect. 5 of the Act of 1904. As that section directs the Board of Trade to issue Regulations for the *guidance* of Local Authorities in the performance of *their duties* it does not appear to give them power to recreate duties taken away by the same statute. It is doubtful, therefore, if this Regulation is enforceable. But *see* notes, *ante*, p. 241. *See also* notes to Instructions, *post*, p. 307.

23. Where in the special circumstances of any case it appears to the inspector to be impracticable to comply literally with any requirement of these Regulations, he shall consult his authority thereon with the view of referring the matter to the Board of Trade, and the Board may, if they think fit, dispense with the observance of such requirement.

24. These Regulations, so far as they relate to material, shall not apply to weights, measures, and instruments used in the manufacture of explosives.[1]

[1] In buildings in which explosives are manufactured, iron, steel, or other metal may be a source of danger. Manufactories of explosives are under very strict supervision of the Home Office and Local Authorities under the provisions of the Explosives Act, 1875, and Regulations made thereunder. This Regulation ensures that where they differ the regulations as regards explosives shall prevail.

MEASURES OF LENGTH.

Examination.

25. Measures of length shall be made of steel, brass, ivory, hard wood, woven tape, or other material approved by the Board of Trade. They shall be examined with the object of discovering flaws or any want of straightness or strength; and they shall be denominated and graduated clearly and indelibly. Wooden measures of 2 feet or more in length shall have both ends tipped with metal, and the tips shall be riveted. In measures such as those used for measuring bales, boxes, timber, etc., any sliding or calliper arms shall have no more play than is necessary for easy movement.

A subdivided measure of length shall have its numbered divisions, and also their subdivisions, of longer lines than the minor graduations.[1]

End measures of length which are not subdivided shall not be stamped unless engraved or marked by the manufacturer "not subdivided."

[1] For example, if a measure be numbered in inches and subdivided into, say eighths, the lines indicating the half-inches must be longer than those indicating quarters, and the quarters than the eighths.

Verification.

26. Every measure of length shall be verified by comparison with a local standard at or near the normal temperature.[1]

[1] This is essential to avoid errors introduced by expansion. *See* par. 161, *ante*, p. 103.

27. A linked measure, or a riband or tape measure, shall be tested when subjected to a tension or pull as follows :—

Ordinary riband or tape measures	2 lb.
" " " (metal) ...	10 lb.
Linked measures	15 lb.

The measure under test shall be supported throughout its whole length on a plane and even base.

28. The errors permissible on the verification of Imperial measures of length are given in Table I.

Stamping.

29. Measures shall be stamped near the beginning of the scale on each graduated side.

In the case of linked measures the stamp may be placed on a metal label or disc permanently attached to the measure, or on the brass handle.

LIQUID MEASURES OF CAPACITY.

Examination.

30. Liquid measures shall be made of glass, earthenware, tin, tin alloys, pewter, brass, bronze, copper, tin-plate, white metal, aluminium, nickel, nickelled or nickel-plated steel or sheet-iron, enamelled-metal, or other material approved by the Board of Trade.

Measures made of pewter or of other tin alloy shall contain at least 80 per cent. by weight of tin, and shall not contain more than 10 per cent. by weight of lead. An inspector is not required to carry out any test to verify the proportions of tin and lead, but the authority concerned shall cause specimens of such measures as may be brought for verification and stamping to be from time to time accurately tested in these respects. A measure made of an alloy composed chiefly of tin shall bear the name and address of the maker [1] on the underside of the bottom of the measure.

Measures made of brass, bronze, or copper shall be well tinned all over the inside.

The coating of nickel on nickelled measures shall be uniform and show no signs of peeling.

Where there are strengthening ribs or bands, they shall not take such a form as to show by indentation or otherwise, divisions inside the measure, which might be mistaken for graduations.

[1] It is doubtful if the Board of Trade has power to direct any action of the maker, but if makers refuse to comply the Board may and probably would disallow the use of a measure made of such alloy at all. *See* note on p. 273, *post.*

31. A liquid measure, if its capacity is clearly defined, may have a top rim, lip, or retaining edge, to prevent spilling, provided that the capacity thus added does not exceed 10 per cent. of the marked capacity of the measure. A false bottom is prohibited.

A measure which is not completely emptied, when tilted

to an angle of 120 degrees from the vertical, shall not be stamped.

32. A publicans' metal, glass, or earthenware measure may be provided with a spout or projecting mouth, and may also have a bottom rim. In measures of a pint and under, such rim shall not project more than half an inch below the bottom of the measure.

33. A metal dipping measure, of a capacity not exceeding a half-gallon, used for the sale of milk, shall be of circular or elliptical section with vertical sides. The height shall not differ by more than 10 per cent. from one and a half times the mean diameter of the section.

34. A measure with a tap shall not be stamped unless the tap completely empties the measure without tilting.

35. A glass measure shall not be stamped unless the capacity is defined either—

(*a.*) by the brim of the measure, or

(*b.*) by a line at least 2 inches in length, distant not less than $\frac{1}{2}$ inch nor more than $1\frac{1}{2}$ inches from the brim.

For subdivided glass measures of a gallon or under, other than apothecaries measures, the subdivisions shall be defined by lines at least 1 inch in length.

An earthenware measure shall not be stamped unless the capacity is defined by the brim, or by an indelible line marked on the inside of the measure so that the distance of the bottom of the line from the brim does not exceed $\frac{3}{8}$ inch on measures of a quart and under, or $\frac{3}{4}$ inch on measures of higher capacities.

The subdivision of metal measures of a capacity not exceeding a half-gallon is not permitted. On a sub-divided milk measure of a capacity not exceeding 5 gallons, there shall be two graduated metal strips fixed opposite each other inside. In a graduated milk measure exceeding 5 gallons, the graduations shall be marked on a metal strip extending the whole

depth of the measure or shall be on tablets securely soldered on the measure. The graduations shall be marked in sharply incised lines.

36. Every measure shall have its denomination clearly, permanently, and legibly marked upon the outside of the body thereof, and not upon the handle, bottom, rim, or edges; and on a glass measure in which the capacity is defined by a line, the denomination of the measure shall be plainly marked at the line. On an enamelled-metal measure, the denomination shall be marked in a distinctly different colour from that of the body of the measure. On a metal milk measure of a capacity exceeding 5 gallons, the denomination shall be marked on the graduated strip or on the tablet as well as on the outside. In the case of a measure made of sheet metal, the denomination shall be marked on a slip of tin[1] or on a shield (*e.g.* of sheet brass) securely soldered on the measure, with a small piece of tin or solder securely fixed thereto for receiving the stamp.

[1] That is when it cannot be marked on the body of the measure without altering its shape or capacity.

37. Apothecaries' measures may be of conical or cylindrical form.

A glass measure, in which the subdivisions are less than one-twelfth inch apart, shall not be stamped.[1]

The total number of the graduations shall be marked upon the measure.

A measure also marked with equivalents in weight may be stamped, provided that the words "of water" are marked on the measure in addition to the denomination.

[1] This appears to mean that no subdivision line shall be less than one-twelfth of an inch from the next, and that the number of the graduations marked on the measure is the total number of these smallest intervals, including divisions and subdivisions whether numbered or not.

Verification.

38. Every measure from eight gallons to a quarter gill, both inclusive, shall be tested by filling the standard with

water and emptying the contents of the standard into the measure submitted for verification.[1]

Where the capacity is indicated by a line, the measure shall be tested to the bottom of the line.

A lip or rimmed measure shall be tested to the bottom of the lip or rim.

[1] On testing liquid measures, *see* pars. 180–190, *ante*, p. 111.

39. In testing a glass measure the capacity of which is not defined by the brim, the level of the water shall be taken at the bottom of the meniscus.[1]

[1] As to reading the level of the water, *see* par. 180, *ante*, p. 111.

40. The errors permissible on the verification of Imperial liquid measures of capacity are given in Table II. and on apothecaries graduated glass measures in Table III.

Stamping.

41. The verification mark shall in the case of publicans' glass or earthenware measures be etched or sand-blasted beneath or near the denomination outside the measure. In apothecaries measures, it shall be placed underneath the marking of the number of the graduations. In metal measures, other than lip or rimmed measures, it shall be stamped outside near the denomination. In lip or rimmed measures, the stamp shall be placed on the bottom of the inside of the lip or rim, as far as practicable.

42. Graduated metal measures shall be stamped in two places, namely, on solder, affixed beforehand to the inside tablet or slip,[1] near to the top graduation, and on the outside of the measure near the denomination.

[1] This Regulation reads as if only one tablet or slip were contemplated, otherwise tablets might be removed. If a large metal measure have separate tablets separately affixed for the divisions, say gallons, these appear to constitute different measures, and therefore to be liable to verification and stamping for each division as distinct measures. Further elucidation of this Regulation will in time presumably be made by the Board of Trade.

DRY MEASURES OF CAPACITY.

Examination.

43. Dry measures of capacity shall be made of sheet-iron or steel, with or without nickel-plating, tin-plate, brass, bronze, copper, nickel, aluminium, well-seasoned wood, or other material approved by the Board of Trade. Measures may be protected by galvanization or by other process approved by the Board of Trade.

Wooden measures turned from the solid or made of sappy wood shall not be stamped.

Measures of a half-bushel or upwards shall be provided with handles.

44. All dry measures of capacity, of a bushel and under, shall be of circular cylindrical form, and the internal diameter shall not differ by more than 5 per cent. from the depth or double the depth.

45. Measures made of wood of the capacity of a gallon and upwards, shall be bound or strengthened with metal or wooden straps or hoops, except when made of wicker or similar open material. A metal band shall be placed round the rim of all wooden measures of the capacity of a peck and upwards.

46. The denomination shall be marked on the measure as in the case of a liquid measure. On a wooden measure, the denomination shall be branded.

Measures made of wicker or similar open material, shall have the denomination marked on a suitable brass tablet or plate, fastened to the measure by means of a copper wire or branded on a tablet of wood securely worked into the side of the measure.

47. No measure shall be stamped which is constructed to contain more than one denomination of measure, unless of a pattern approved by the Board of Trade under Section 6 of the Weights and Measures Act, 1904.

Verification.

48. Every dry measure of capacity, not being a measure made of wicker or other open material, shall be tested either with water,[1] or in the following manner with rape seed :—

(*a.*) The standard shall be filled with seed passed through a hopper, a distance of six inches being left between the bottom of the hopper and the top of the local standard.[2]

(*b.*) All the seed contained in the standard shall then be replaced in the hopper and thence run from the hopper into the measure under verification, which shall be placed so that the same distance of six inches intervenes between the bottom of the hopper and the top of the measure.

Measures made of wicker or other open material, shall be tested by means of cereals of the smallest size practicable.

[1] It is obviously unnecessary to test any measure with water unless it is of such a kind that it might possibly be used for liquids.

[2] Care should be taken that the hopper is filled with a quantity slightly in excess of the capacity of the standard. If a large excess be used the seed may be more compressed than in the subsequent filling of the measure. Under sect. 17 of the Act of 1878, *ante*, p. 149, dry measures must not be heaped, but stricken with a roller evenly from end to end.

49. The errors permissible on the verification of Imperial dry measures of capacity are given in Table IV.

Stamping.

50. Metal measures shall be stamped near the brim in a vertical line with the denomination. Where necessary, metal measures shall be provided by the maker[1] with a soft plug to receive the stamp.

Wooden measures shall be branded outside in a vertical line with the denomination, and, in the case of new measures, also in the inside angle at the bottom of the measure.

Measures made of wicker or other open materials shall be stamped on the tablet, plate, or fastening in such manner that it cannot be removed without defacing the stamp.

[1] The Board of Trade cannot direct the actions of makers directly, but they can make a regulation to the effect that metal measures shall not be stamped if not provided with a soft plug where such is necessary. That is probably what was meant here.

WEIGHTS.

Examination and Verification.

51. All weights shall be made entirely of some metal other than lead, except where lead is inserted for purposes of adjustment. Weights made of soft metals or soft alloys, *e.g.* tin or solder, shall not be stamped. Avoirdupois weights shall not be constructed of aluminium, or other metals or alloys of low density.[1]

[1] The reason for this is obvious, *viz.* weights of light metals would be of much larger bulk than the same weights in denser metals, and therefore their use would facilitate fraud.

52. Cased weights, and weights which are composed of two or more different unalloyed metals, shall not be stamped. The period of allowance in the case of such weights shall be two years.[1] Provided, nevertheless, that iron weights may be protected by galvanization, or other process approved by the Board of Trade.

[1] Cased weights in manufacturers' and dealers' stocks come under Reg. 14 (*a*) above; they may be re-stamped till 30th September, 1909. After that date they may be continued in use until the stamp is obliterated under Reg. 12 above.

53. If the maker's name appears on the weight, it shall be in letters not exceeding half the size of the letters indicating the denomination.

No weight marked with a trade mark shall be stamped.[1]

[1] This appears to be too sweeping a prohibition, and not within the powers given to the Board of Trade under sect. 5 of the Act of 1904. If it were confined to cases in which the trade mark might be mistaken for an official stamp it might be reasonable, but still it is doubtful if it would come within sect. 5 (*a*), *ante*, p. 240. Compare Reg. 15, *ante*, p. 258.

54. Avoirdupois weights of iron shall be either flat-circular, bar, bell or ring weights ; but 50 lb., 20 lb., 10 lb , and 5 lb. weights shall be of octagonal form.

Iron weights of flat shape shall only be made from 4 lb. to 4 oz., inclusive. No iron weight under 4 oz. shall be stamped.

Avoirdupois weights, other than iron weights, shall be flat-circular, bar, or bell shaped ; but 50 lb., 20 lb., 10 lb., and 5 lb. weights shall be of octagonal form. Flat weights shall only be stamped from 4 lb. to $\frac{1}{2}$ dram, inclusive, and the weights in each set shall be of similar form and proportional dimensions.

55. Troy bullion weights,[1] apothecaries weights, and grain weights of 1 oz. and upwards, shall be made of solid brass, gun-metal, or bronze, and shall be cylindrical, with either handles or knobs. Those below 1 oz. shall be flat or of wire, and shall be made of solid brass, gun-metal, bronze, platinum, or aluminium.[2]

[1] These weights are not defined. Weights for testing coin cannot be verified by the inspector, but must be done by the Board of Trade (sect. 31 of Act of 1878, *ante*, p. 162). If used for buying or selling gold they come within the inspector's jurisdiction.

[2] Aluminium is the lightest of these metals. An aluminium weight will be 7·9 times the bulk of the same weight made of platinum. Its usefulness for weights of small denominations lies in the fact that such weights will be comparatively bulky, and easy to handle. Platinum is used for small weights, notwithstanding its density, because it can be beaten out extremely thin, and is not affected by air or acids.

56. No weights shall be stamped which are not free from flaws, and quite smooth on all their surfaces.

No new iron weights shall be stamped which are not blacked, black-leaded, oxidized or protected by galvanization or other process approved by the Board of Trade.[1]

Iron weights shall not have removable or split rings.

[1] This is to prevent rust. Rusting increases the weight, but when the rust is removed the weight is lighter than it was originally.

57. Avoirdupois weights, of 1 oz. and over, shall be provided with one adjusting hole only.

All adjusting holes shall be in the under-surface of the weight, and shall not extend to the upper surface. They shall be undercut and plugged with lead, which shall cover the bottom of the hole, and shall not project beyond the surface. No weight adjusted in any other manner shall be stamped.

58. In iron weights, of flat shape, the lead inserted for adjustment shall not be less than one-eighth of an inch thick; the approximate depth of the hole shall be equal to $\frac{3}{5}$ of the centre thickness of the weight, and the approximate minimum distance of lead from the surface when new, shall be one-fifth the centre thickness of the weight.

The hole shall be circular; and for 4 lb. and 2 lb. weights the diameter shall approximately be 1 inch, for 1 lb. weights $\frac{3}{4}$ inch, and for 8 oz. and 4 oz. $\frac{1}{2}$ inch.

The adjusting holes of iron weights of other than flat shape shall be rectangular or circular, and shall not exceed the area of a rectangle of the following approximate dimensions:—

—	Length.	Width.	Approximate minimum distance of lead from surface when new.
	Inch.	Inch.	Inch.
100 lb.	3	$1\frac{1}{2}$	$1\frac{1}{2}$
56 ,, } 50 ,, }	$2\frac{1}{2}$	$1\frac{1}{4}$	$1\frac{1}{4}$
28 ,, ...	2	1	1
20 ,, ...	$1\frac{1}{2}$	$\frac{3}{4}$	$\frac{3}{4}$
14 ,, ...	$1\frac{1}{4}$	$\frac{5}{8}$	$\frac{5}{8}$
10 ,, } 7 ,, }	1	$\frac{1}{2}$	$\frac{1}{2}$
5 ,, } 4 ,, }	$\frac{3}{4}$	$\frac{1}{2}$	$\frac{1}{2}$
2 ,, } 1 ,, }	$\frac{5}{8}$	$\frac{1}{2}$	$\frac{1}{2}$
8 oz.	$\frac{5}{8}$	$\frac{3}{8}$	$\frac{1}{4}$
4 ,, ...	$\frac{1}{2}$	$\frac{5}{16}$	$\frac{1}{4}$

The adjusting holes of weights, other than iron weights, shall be circular and approximately of the following dimensions:—

—	Diameter.	Depth.	Approximate minimum distance of lead from surface when new.
Other than Flat shape:—	Inch.	Inch.	Inch.
100 lb., 56 „, 50 „	$1\frac{1}{2}$	2	1
28 „, 20 „, 14 „	1	$1\frac{1}{2}$	$\frac{3}{4}$
10 „, 7 „, 5 „, 4 „, 2 „	$\frac{3}{4}$	1	$\frac{1}{2}$
1 „, 8 oz.	$\frac{1}{2}$	$\frac{3}{4}$	$\frac{3}{8}$
4 „	$\frac{3}{8}$	$\frac{5}{8}$	$\frac{1}{4}$
2 „, 1 „	$\frac{1}{4}$	$\frac{3}{8}$	$\frac{3}{16}$
Flat shape:—			
4 lb., 2 „, 1 „	$\frac{3}{4}$	$\frac{3}{5}$ths centre thickness of weight.	$\frac{1}{5}$th centre thickness of weight.
8 oz., 4 „	$\frac{1}{2}$		
2 „, 1 „	$\frac{1}{4}$		

Solid troy bullion,[1] apothecaries, grain, or metric weights (other than those of iron) which have no adjusting hole may be stamped.

[1] *See* note 1 to Reg. 55, *ante*, p. 269.

59. The errors permissible on the verification of Imperial weights are given in Tables V., VI., VII., and VIII.

Stamping.

60. Weights shall be stamped on the lead in the adjusting hole in the under surface of the weight.

Weights not provided with an adjusting hole shall be stamped on the under surface.

WEIGHING INSTRUMENTS.

General.

61. A weighing instrument of the vibrating type [1] shall be tested for sensitiveness [2] by loading the instrument with the maximum testing load, with the beam or steelyard in a horizontal position, and ascertaining that it turns with the addition of the amount shown in the Tables for sensitiveness. No test for sensitiveness at a lower load shall be made.

For beam-scales, the addition of this amount on either side shall cause an appreciable movement of the beam.

For other vibrating instruments, the addition of this amount shall cause the beam or steelyard to rise or fall to the limit of its range of movement.

[1] What constitutes a "vibrating" instrument is explained, *ante*, p. 39.

[2] The term "sensitiveness" is not defined in these Regulations. It is obviously used here to mean the minimum addition to the weight which will move the balance. Sometimes it has a totally different meaning. *See* pars. 45–47, 57, *ante*, pp. 24, 31.

62. Weighing instruments of the vibrating type shall be tested for error, by ascertaining the weight in excess or deficiency (if any) required to bring the beam or steelyard of the machine to a horizontal position when fully loaded.

Weighing instruments of the accelerating type [1] shall be tested for error by ascertaining the weight required, when the machine is fully loaded, just to keep the beam or steelyard in a horizontal position on its stop or carrier and no more; and shall be further tested by ascertaining the weight required to bring back the beam or steelyard from its position of greatest displacement to the horizontal position, the machine being fully loaded and truly balanced.

[1] For the reasons for these tests, *see* pars. 90–92, *ante*, p. 53.

63. For capacities not tabulated, the allowances for error, and the required sensitiveness shall be proportional.[1]

[1] It is difficult to say what is intended by this term. One meaning may be that the allowances are to be taken by differences, *e.g.*

Class A (*post*, p. 304); the difference between a 7-lb. and 56-lb. machine allowed is, for sensitiveness 1 grain (1·5 − ·5), and the same for error (2 − 1), that is, 1 gr. in each case. The corresponding difference in capacity is 49 lb. (56 − 7). That gives nearly ·02 gr. per lb. Thus a machine of capacity 30 lbs. would have a difference of 23 (30 − 7), giving 23 × ·02 grains or ·46 gr.; the sensitive limit would therefore be ·5 + ·46 or ·96 gr., and the error limit 1·46 gr. Similarly a machine of capacity 32 lbs. would be 1 gr. and 1·5 gr. respectively. In Class B, a 12-lb. machine would on this system have limits 7 gr. for sensitiveness, and 10·5 for error respectively.

64. Movable instruments provided with a base shall be tested on a level plane, and instruments which are suspended in use shall be suspended when tested.

65. Every new weighing instrument shall have a maker's name,[1] and its capacity prominently and indelibly [2] marked on it. The capacity shall be indicated thus, for example,

"To weigh lb."

[1] There is no authority in any of the Acts giving power to the Board of Trade to require the maker's name. Sect. 5 of the Act of 1904, *ante*, under which these Regulations are made, does not give any power to prohibit the stamping only because the maker's name is not on the instrument.

[2] The Board of Trade have intimated that there "would appear to be no objection under" this Regulation "to the maker's name being painted on weighing instruments, provided it is done in such a manner as to be plain and durable, and not liable to defacement in the ordinary use of the instrument."

66. A weighing instrument with removable hooks (other than the hooks or bearings of "swan-neck" beams, and the hooks at the end of steelyards of compound lever machines) shall not be stamped unless it is of a pattern approved by the Board of Trade under Section 6 of the Weights and Measures Act, 1904.

67. All knife-edges and bearings shall be of hard steel or agate, or other material approved by the Board of Trade; they shall be so fitted as to allow the beam or steelyard to move easily, and the knife-edges shall practically bear upon the whole length of their working parts.

68. No weighing instrument having a counterpoise or travelling poise shall be stamped, unless such counterpoise or travelling poise is provided by the manufacturer with a hole or other suitable means for future adjustment, such adjusting hole being undercut; if loose material is used in a travelling poise, it shall be securely enclosed.[1]

The inspector shall ascertain that a weighing instrument is properly balanced when not loaded,[2] that the beam has sufficient room for oscillation, and that it returns to the position of equilibrium, or that the indicator returns to the zero mark or minimum graduation, when a load is removed.

[1] As to errors caused by displacement of adjusting material, *see* pars. 123–127, *ante*, p. 80.

[2] *See* pars. 126–128, *ante*, p. 84.

69. No instrument with removable parts, the removal of which would affect the accuracy of the instrument, shall be stamped, unless the parts are such that the instrument cannot be used without them.

70. Where an instrument has interchangeable or reversible parts, the interchange or reversal shall not affect the accuracy of the instrument.

71. All graduations shall consist of sharply defined lines, so that the position of all sliding poises or indicators shall be clearly readable.

BEAM-SCALES.

72. The term "beam-scale" means any equal-armed weighing instrument, the pans of which are below the beam.

73. All beam-scales shall be divided into three classes[1]:—

Class A includes only chemical and assay balances and other beam-scales provided with means for relieving all the bearings and knife-edges. Class A instruments must satisfy the requirements of Table XIII., and need not be marked with a class mark.

Class B includes only beam-scales, other than Class A instruments, which satisfy the requirements of Table XIV. for Class B instruments.

Class C includes all beam-scales, other than instruments in Class A or Class B, which satisfy the requirements of Table XIV. for Class C instruments.

[1] Section 5 (*d*) of the Act of 1904, *ante*, p. 241, provides that the limits of error may be different in different trades. In order to give effect to this in practice the classification of scales is necessary.

74. Every new beam-scale, other than a Class A instrument, shall be indelibly marked beforehand either "Class B" or "Class C," and shall satisfy the requirements of Table XIV. with reference to the class with which it is marked.

75. Weighing instruments brought into use in the special trades of the first class set out below, after the date of these Regulations, shall be either Class A or Class B instruments, or shall satisfy the requirements for Class B instruments in Table XIV.

Weighing instruments brought into use in the special trades of the second class set out below shall be either Class A, Class B, or Class C instruments, or shall satisfy the requirements for Class C instruments in Table XIV.:

SPECIAL TRADES.

First Class.

Gold and silver merchants.
Dealers in precious metals.
Dealers in precious stones.
Jewellers.
Retail Chemists or Druggists.
Silk merchants.

Second Class.

Retail Dealers in tea or coffee.
Retail Dealers in tobacco.

Examination.

76. Beam-scales, the beam of which is under 16 inches in length, or which are of a capacity of 7 lb. or under, with swan-neck ends, shall not be stamped. Larger beam-scales of this nature shall have flat end bearings and swivel hooks.

The period of allowance shall be five years in both cases.[1]

[1] So long as these scales comply with the requirements of Regulations in force on 30th September, 1907, they may be re-stamped after corrections, re-adjustments, etc., up to 30th September, 1912, after which they may be used until the stamp is obliterated under Reg. 12, *ante*, p. 254. New instruments of this type could be stamped up to 31st December, 1907, and then continued under the same conditions.

77. Beam-scales with loaded weight pans, or new beam-scales of a capacity less than 2 cwt., with wooden scale boards, shall not be stamped.

78. Any attachment for adjusting the balance of a beam-scale shall be permanently fastened, and, where a balance ball or box is used for occasional adjustment, it shall be so fixed that it cannot be readily tampered with.

Beam-scales with wooden scale boards shall be provided with a balance ball or box.

Verification.

79. With the pans loaded to half the capacity, no appreciable difference in the accuracy of the instrument shall result from moving the knife-edges or bearings laterally or backwards and forwards within their limits of movement.[1]

[1] For verification generally and cause of errors, *see* pars. 66–76, *ante*, pp. 38–42.

80. The instrument shall be correct whether the load is on the middle or near the edge of the pan.

81. The errors permissible on the verification of beam-scales are shown in Tables XIII. and XIV.

Stamping.

82. On beam-scales, the verification mark shall be placed on the stud or plug on the beam, immediately under or over the central knife-edge.

The inspector may stamp any plug or stud in the same manner as he would stamp a weight, or by means of marking pincers.

COUNTER MACHINES.

83. The term "counter machine" means any equal-armed weighing instrument of a capacity not exceeding 1 cwt.,[1] the pans of which are above the beam, and includes, together with the ordinary type, such instruments as are specially designed for counter use, and which do not exceed the above-mentioned capacity.

[1] Those exceeding 1 cwt. capacity are "dead weight" machines, and are dealt with in Regs. 108–113 below.

Examination.

84. Accelerating counter machines shall not be stamped. The period of allowance shall be ten years.

[1] That is, new machines shall not be stamped after 31st December, 1907. Manufacturers' and dealers' stocks could be stamped up to that date. Machines duly stamped may be continued in use and re-stamped from time to time up to 30th September, 1917, so long as they comply with the Regulations in force before 1st October, 1907. After 30th September, 1917, they may be continued in use until they become incorrect so as to justify obliteration of stamp under Reg. 12 above.

85. When the beam or body has two sides, they shall be connected together by not less than two cross bars; and the supports for the pans shall be of suitable rigid structure, such as crosses strengthened by straps.

Centre forks shall be fixed so that they cannot twist or get out of place.

The bearing surfaces and points of contact of all stays, hooks, and loops shall be of hard[1] steel or agate or other material approved by the Board of Trade.

[1] Hardness of bearings is also dealt with in Reg. 67 above.

86. Where a counter machine is adjusted by means of a balancing box, it shall be permanently fixed beneath the weight pan, and shall only be large enough to contain loose material to an amount not exceeding 1 per cent. of the capacity of the machine.

No other adjusting contrivance is permissible.

87. No sliding or tare weight is permissible.

Verification.

88. The minimum "fall," either[1] way, on counter machines shall be as under:—

Capacity.	Inch.
Not exceeding 4 lb.	$\frac{1}{4}$
Above 4 lb. and not exceeding 7 lb.	$\frac{5}{16}$
,, 7 lb. ,, ,, 28 lb.	$\frac{3}{8}$
,, 28 lb. ,, ,, 56 lb.	$\frac{7}{16}$
,, 56 lb.	$\frac{1}{2}$

[1] The word "either" here appears to be a slip for "each," a common but inaccurate use of the word.

89. With the pans loaded to half the capacity, no appreciable difference in the accuracy of the instrument shall result from moving the knife-edges or bearings laterally or backwards and forwards within their limits of movement.

90. When the goods-pan is not in the form of a scoop, *the instrument shall indicate the same weight*[1] *within* half the prescribed limits of error, if the centre of a load equal to half the capacity is placed on the goods-pan anywhere within a distance from the centre equal to one-third the greatest length of the pan, or, if the pan has a vertical side, against

the middle of that side; the weight being entirely on the weights-pan but in any position on it.

[1] The Board of Trade have interpreted this Regulation by expressing it in other words as follows:—"When the goods-pan is not in the form of a scoop, *the extreme difference in the indications of the instrument* (i.e. *the difference between its highest and lowest indication*) *shall not exceed* half the prescribed limits of error, etc." *See* paper by Mr. *G. W. Davis* in *Monthly Review*, December, 1907.

91. When the goods-pan is in the form of a scoop, the instrument shall be correct, if half the full load is placed against the middle of the back of the scoop, and the other half in any position on the scoop.

92. The errors permissible[1] on the verification of counter machines are shown in Table XV. In carrying out the tests for sensitiveness and error, the load shall be distributed over the platform.

[1] Instruments within Reg. 90 must satisfy both that Regulation and this.

Stamping.

93. The verification stamp shall be placed upon the plug or stud provided for that purpose on a conspicuous part of the beam or body of the machine.

SPRING BALANCES.

Examination.

94. A spring balance, of a capacity of 30 lb. or under, with the goods-pan below the spring, shall be permanently suspended from a stand, support, or bracket, and if not so suspended shall not be stamped or re-stamped.[1]

[1] According to Reg. 14, *ante*, p. 257, existing stocks of spring balances may be stamped till 31st December, 1907, and those now in use may be continued in use so long as they comply with previous

Regulations and are not so incorrect as to justify the obliteration of the stamp under pars. (*g*), (*h*), and (*i*) of Reg. 12, *ante*, p. 255. Those that can be made to conform to this Regulation by being attached to a permanent support do not come within par. (*a*) of Reg. 12.

95. The extremity [1] of the index-finger shall not exceed $\frac{1}{32}$ inch in width, and shall not be more than $\frac{1}{10}$ inch from the scale or dial.

[1] What is evidently meant is that part of the index-finger which traverses the marks of the graduations.

96. The scale shall be graduated into approximately [1] equal parts, and the minimum width apart of the graduations shall not be less than $\frac{1}{16}$ of an inch for a capacity of 30 lb. and under, and not less than $\frac{1}{8}$ of an inch for a capacity of 40 lb. and over.

[1] Presumably this means that the graduations shall represent equal differences of weight.

97. The weights corresponding to the interval between consecutive graduation marks shall conform to the following Table:—

Capacity.	Weight corresponding to interval between consecutive graduations must not exceed
1 lb.	2 drams.
2 lb. to 7 lb. . . .	4 ,,
10 lb. to 15 lb. . . .	8 ,,
20 lb. to 30 lb. . . .	1 oz.
40 lb. to 60 lb. . . .	2 oz.
100 lb. and over . . .	1/200th of capacity.

When the graduation commences at a fixed load, the position of the index, when there is no load, shall be clearly indicated by a zero mark.

98. Capacities between 1 lb. and 100 lb., other than those included in the above table, are not permitted.[1]

[1] The grammatical meaning of this Regulation is that balances of the following capacities are prohibited: 8 and 9 lbs.; 16 to 19 lbs. inclusive; 31 to 39 lbs. inclusive; 61 to 99 lbs. inclusive. Thus a weight of 65 lbs. must be weighed on a balance of capacity not less than 100 lbs. and so on.

99. When a spring balance is provided with an adjustable indicator, the range of adjustment shall not exceed 1 per cent. of the capacity of the instrument, except in the case of instruments used for colliery purposes, when it shall not exceed 2 per cent.

Verification.

100. When the pan is below the spring, the prescribed limits of error shall not be exceeded wherever the load is placed upon it. Where the pan is above the spring, the Regulations regarding the position of the load on the pans of counter machines apply.

101. Each numbered graduation shall be tested; intermediate graduations may be tested if necessary.

The instrument shall be correct, whether the test is forward or backward, provided that in either case the spring shall be allowed to vibrate before the reading is taken.

The inspector may test the balance for efficiency or ability to recover, by leaving on a load equal to the maximum capacity for a period of twenty-four hours or less,[1] and then, after the expiration of four hours, testing for accuracy.

[1] This apparently means a substantial period of time with 24 hours as a maximum; it does not mean any time, however short. Four hours is given for recovery in all cases, and the test for accuracy is to be made immediately afterwards.

102. Spring balances of a capacity of 30 lb. and under shall satisfy the requirements as regards error of counter machines of similar capacity. For spring balances of a capacity of 40 lb. and over, the error shall not exceed the weight corresponding to a quarter of the interval between consecutive graduations.

Spring balances shall not be tested for sensitiveness.

Stamping.

103. Spring balances shall be fitted with a soft metal plug to receive the inspector's stamp, and, wherever practicable, the plug shall pass through the dial and frame. The plug shall be so supported as to avoid risk of injury to the instrument by stamping.

STEELYARDS.

Examination.

104. The inspector shall not stamp—

(*a*) any steelyard which is reversible and has three hooks,[1]

(*b*) any accelerating steelyard,

(*c*) any counter steelyard,

(*d*) any steelyard not having a zero graduation, nor

(*e*) any steelyard of a capacity of less than 56 lb.,

unless the pattern thereof has been approved by the Board of Trade under Section 6 of the Weights and Measures Act, 1904.

The period of allowance shall be five years.[2]

[1] See Fig. 26 (2), *ante*, pp. 59, 61.

[2] Makers' and dealers' steelyards not within this Regulation may (if complying with old regulations) be stamped until 31st December, 1907 (Reg. 14, *ante*, p. 257). All stamped before 1st January, 1908, may be continued and re-stamped (if complying with old regulations) until 30th September, 1912, and may subsequently be continued in use until they become inaccurate and stamp is obliterated, although they do not comply with this Regulation.

105. Steelyards shall be made of wrought iron, steel, or other material approved by the Board of Trade. The shank shall be perfectly straight.

Each set of notches, or graduations, on the shank shall be cut in one plane, and be at right angles to the shank.

All steelyards shall be provided with a stop or other suitable arrangement, to prevent excessive oscillation of the shank.

Sliding poises and suspending hooks shall be securely attached to the instrument.[1]

All end fittings, such as the nut attached to prevent the poise carrier riding off the steelyard arm, shall be securely fixed to the shank.

The sliding poise shall be freely movable without risk of injury to the notches from constant use, and there shall be a

stop to prevent it from travelling behind the zero mark or lowest graduation.

[1] Any change of sliding poises may make an unjust machine. The accuracy of a steelyard depends on not only the weight of the poise but also the position of its centre of gravity; *see* pars. 104, 105, 123–126, *ante*, pp. 65, 80.

Verification.

106. Each numbered graduation shall be tested,[1] and the instrument shall be correct whether the test is forward or backward.

The allowances for error in the case of steelyards shall be twice those prescribed for counter machines or dead-weight machines of similar capacity.

[1] As to testing graduations, *see* par. 104, *ante*, p. 65.

Stamping.

107. The verification mark shall be placed upon the plug or stud on the front face[1] of the shoulder of the steelyard.

[1] If a steelyard have two scales, say metric and imperial, one on each side, or both on one side, it is not clear if two stamps will be required. If once made accurate and verified and, on a subsequent testing, one scale be found accurate, the other will be so also, if the same poises are used on both. If different poises be used they are substantially two instruments.

DEAD-WEIGHT MACHINES.

108. The term "dead-weight machine" means any weighing instrument similar in principle of construction to a counter machine, but constructed to weigh loads of a capacity of 1 cwt. or over, and includes—

(*a.*) The Low pattern or cotton machine with the weighing platform near the ground, and the connecting stays or hooks above the beam.

(*b.*) The High pattern or single machine with the weighing platform at a convenient height, and the connecting stays or hooks below the beam. This form includes equal-armed machines for weighing coal or vegetables.

(*c.*) The Double machine, a combination of (*a.*) and (*b.*).

Examination.

109. The bearing surfaces and points of contact of all stays, hooks, and loops, shall be of hard steel, and the centres shall have rectangular shoulders and fit into rectangular holes, being firmly secured.

The bearing surfaces of the adjustable slides shall be of hard steel, and the stems holding them in position shall be secured by lock nuts or otherwise.

The goods platform shall not exceed in length the length of the beam, and in width double the width of the beam. Folding wings shall not increase such dimensions more than one-third in either direction.

Platforms shall be of metal or hard wood.

The minimum fall in dead-weight machines shall be $\frac{5}{8}$ inch both ways for vibrating machines, and $\frac{7}{8}$ inch one way for accelerating machines.

110. Loose balancing material shall be contained in a balancing box, permanently fixed beneath one platform, and its weight shall not exceed $\frac{3}{4}$ per cent. of the capacity of the machine. Any other balancing material shall be in one piece, and shall be permanently attached to the machine.

Verification.

111. The instrument shall indicate the same weight[1] within half the prescribed limits of error, if a load of one-fourth the capacity is placed successively at the middle of the front and back of each platform, and centrally over the knife-edges on each side.

[1] *See*, for interpretation, note to Reg. 90, *ante*, p. 279.

112. The errors permissible on the verification of dead-weight machines are shown in Table XVI. In carrying out

the tests for sensitiveness and error, the load shall be distributed over the platform; but in the case of the Double Machine half the load shall be distributed over each of the goods platforms.

Stamping.

113. The plug or stud for the verification mark shall be placed on a conspicuous part of the beam or body of the machine.

PLATFORM MACHINES AND WEIGH-BRIDGES.

Examination.*

114. Weigh-bridges and dormant platform machines shall be verified and stamped *in situ*,[1] in addition to any preliminary test on the maker's premises.

[1] This provision is necessary because inaccuracies may be introduced by differences of level and other causes that may arise in the building up of the machine; *see* pars. 119, 121, *ante*, p. 77.

115. The steelyard of a machine shall not involve any readily removable parts, except the support for the counterpoises. There shall be a stop or stops to prevent the sliding poise or poises from travelling behind the zero mark.

The steelyard or registering mechanism may be confined in a locked box or case, provided that the indications or graduations are visible.

The minimum travel of the steelyard in platform machines shall be $\frac{3}{8}$ inch both ways for vibrating machines, and $\frac{5}{8}$ inch one way for accelerating machines. The minimum travel of the steelyard in weigh-bridges shall be $\frac{1}{2}$ inch both ways for vibrating machines, and $\frac{3}{4}$ inch one way for accelerating machines.

* The reader is referred to Mr. Crabtree's paper on these Regulations in the *Monthly Review*, December, 1907.

116. If a movable hutch, barrow, frame, or bucket is used instead of the ordinary platform, it shall form an essential part of the machine, without which it cannot be balanced.

All counterpoises for use in connection with movable hutches, etc., shall be tested.

All loose counterpoises shall be identified with the machine by a number or other sufficient mark of identification, which shall be indelible. They shall be marked with their equivalent weights[1] in the following manner:—*e.g.*

= 1 cwt.

A loose counterpoise marked in Imperial denomination shall not be of hexagonal shape.

[1] If the counterpoise also be marked with its actual weight, *e.g.* "1 lb. = 1 cwt." it then becomes a "1 lb. weight," and on verification must be within the limits of error for such a weight, as well as within the proper limits of error when used on the machine. It is very convenient for makers and users to have their counterpoises actually corresponding to legal weights, but it is not advisable to have them so denominated.

117. A small portable coal machine, of the kind sometimes known as the "bob-up machine," shall not be stamped if the counterpoise weights are threaded on a pin rigidly attached to one end of the main lever. Such counterpoises shall be used in a tray or pan suspended from a knife-edge, or be placed on a loose shackle.

118. The balancing arrangement for daily wear and tear shall have a range not exceeding $\frac{1}{2}$ per cent. of the capacity of the machine, and not less than $\frac{1}{8}$ per cent. each way.[1] In a new machine, it shall be securely attached and actuated by a detachable key.

[1] The balancing weight compensates for all constant errors such as variation in weight of platform or hooks, etc., displacement of centre of gravity of sliding poise, it cannot correct errors caused by incorrect weight of a sliding poise. These limits, therefore, may be tested by using any weight on platform large enough to enable the poise to keep clear of the zero. First, the balance should be adjusted that the machine indicates zero correctly when no weight is on the platform. Then place say a weight on the platform (preferably equal to $\frac{1}{2}$ per cent. of capacity of

machine), and see that this is indicated correctly by the sliding poise. Next, screw the balancing weight to the end of its travel in one direction and note the apparent change in the weight (say it is light by an amount x). Screw the balance ball to the extremity of its travel in the other direction and note the apparent change in the weight (say it is heavy by an amount y). To satisfy this regulation each of these differences (x and y) must be $\frac{1}{8}$ per cent. of capacity of machine or more, and the sum of the two together ($x + y$) must not be more than $\frac{1}{2}$ per cent. of the capacity. It is to be noted that this regulation makes no distinction between the travel in a backward or forward direction; *see* par. 132, *ante*, p. 88.

119. The following provisions apply specially to platform machines and weigh-bridges with dials :—

Racks and pinions shall be of hard metal.

The extremity of the index shall in no position be at a greater distance from the graduated surface of the dial than $\frac{3}{16}$ inch; and shall be made to meet but not to obscure the graduation marks.

The registration mechanism, and cylinders or tanks containing liquid (if any), shall be protected from dust, and from excessive variations of temperature.

In a self-indicating pit-bank weighing machine, the pendulous lever, suspension rod, and water box shall be suitably enclosed.

Verification.

120. The inspector shall, in other than dial machines, proceed to test each numbered graduation up to one ton, or to such smaller amount as the last graduation on the steelyard may indicate.[1] He shall then test the loose counterpoises where such are provided, and finally test the machine ton by ton, or load it with heavy material to within one ton of its maximum load, and ascertain that an additional ton is correctly indicated.[2] With the necessary modifications, the test of dial machines shall be made in a similar manner.

[1] As to testing, *see* pars. 120–134, *ante*, p. 78.

[2] This tests whether the machine is strained or put out of order by the maximum load.

121. With one-quarter the maximum load, or as near thereto as is practicable, the machine shall indicate the same weight within half the prescribed limits of error, whether the load is placed on the middle or near the ends or corners of the platform.[1]

[1] This test is directed to ascertain if the mechanism under the platform, the levers, etc., are all in order.

122. When a platform machine is fitted with relieving gear the prescribed limits of error shall not be exceeded when the machine is put steadily out of and into gear. The plate or platform shall be entirely disengaged from its bearings when the machine is in relief.

123. The errors permissible on the verification of platform machines are shown in Table XVI., and of weighbridges in Table XVII. The tests for sensitiveness and error are to be made at full load, or as near thereto as circumstances will permit.

Stamping.

124. On a dial machine the verification mark shall be made on a soft metal stud or plug fixed on the dial.

On a platform machine or weigh-bridge other than a dial machine, the mark shall be placed on the plug or stud in a conspicuous position, either on the shoulder or the opposite end of the indicating lever or steelyard.

125. The inspector shall place his date stamp upon the lead in the adjusting hole of loose counterpoises.

CRANE MACHINES.

Examination.

126. Crane weighing machines may be constructed upon the lever, spring, or hydraulic principles.

All working parts shall be suitably protected from damp and dust.

In a lever machine, the steelyard may be made of special metal to resist atmospheric influences, provided it is sufficiently rigid and accurate. The rack and pinion in a dial machine shall be of suitably hard metal.

127. The range of balancing or adjusting arrangements shall not exceed 2 per cent. of the capacity of the machine.

128. A crane machine may be verified and stamped on the maker's premises. It shall be tested to its full weighing capacity, if practicable.

129. Hydraulic machines in which it is necessary, in order to get a correct weight indication, to twist the load hook, shall not be stamped unless a prominent notice to this effect is permanently affixed to the machine.

Verification.

130. The steelyard movement shall be correct, and the dial hand work freely and return to its initial starting-point after the load is removed.

Each numbered division shall be tested as far as practicable.

131. For lever machines the limits of error shall be, for machines below 1 ton, the same as for vibrating platform machines, and for machines of 1 ton and upwards, the same as for vibrating weighbridges.

For spring machines, the limits of error shall be double those for lever machines.

For hydraulic machines used as approximate weighers for ascertaining freight and for checking in purposes, the limits of error shall be one-half of the weight represented by the interval between consecutive graduation marks; they shall not be tested for sensitiveness.

Stamping.

132. The stamping plug shall be placed on a conspicuous part, either of the steelyard or of the dial of the machine.

AUTOMATIC MACHINES.

133. The term "Automatic weighing machine" means a machine in which special self-acting machinery is introduced to effect an automatic feed, the rapid weighing of given loads, the registration and summation of loads, and other similar purposes, or some of them.

Examination and Verification.

134. Automatic machines and their integral parts such as special beams, etc., shall, as far as practicable, satisfy the requirements of these Regulations, where such are applicable as regards principle, detail, or material of construction, except as may be otherwise provided by future Regulations under Section 5 of the Act of 1904.

Beams need not be marked with any class, but shall be identified with the machine by a number or other sufficient mark of identification which shall be indelible.

The adjusting mechanism shall be suitably secured or protected so that it cannot be readily tampered with.

The accuracy of the output of the machine shall be verified by re-weighing, over another weighing instrument, not less than 20 continuous loads; or, where practicable, the machine may be tested directly by the application of standard weights.

In testing "totalising" machines, not less than 40 loads shall be passed over the machine, *i.e.* 10 minimum loads, 10 maximum loads, and 20 loads of the mean between the minimum and maximum.

135. The errors permissible on the verification and inspection of certain classes of automatic machines are as follows:—

Use.	Capacity.	Error.	
Weighing small loads of tea, coffee, etc.	1 oz., and upwards.	½ per cent. of the load, in excess only.	
Weighing grain, etc.	10 lb., and upwards.	¼ per cent. of the load, in excess or deficiency.	The allowances in these cases are subject to the proviso that the error tolerated shall not exceed the weight represented by half a minimum division marked on the dial or steelyard.
Weighing coal, etc.	100 lb., and upwards.	½ per cent. of the load, in excess or deficiency.	
"Totalising" machines used for weighing coal, etc.	10 cwt., upwards.	½ per cent. of the total load of 40 weighings, in excess or deficiency.	

Stamping.

136. The stamping plug shall be placed upon the beam, shank, or dial of the machine.

PRICE COMPUTING WEIGHING INSTRUMENTS.

Examination and Verification.

137. The inspector shall ascertain that any weighing instrument constructed to calculate and indicate price passes the tests specified in these Regulations for the particular class of instrument to which it may belong, and that it indicates price correctly.

The weight indicated shall be clearly visible.

All numbered graduations shall be tested.

Stamping.

138. A soft metal plug shall be fitted on a conspicuous part of the instrument to receive the inspector's stamp.

WEIGHTS, MEASURES, AND INSTRUMENTS OF THE METRIC SYSTEM.

139. These Regulations shall apply to weights, measures, and instruments of the metric system wherever applicable. The errors permissible on metric weights and measures are shown in Tables IX. to XII. The errors permissible on metric weighing instruments shall be proportional to those permissible on instruments of Imperial capacity.

Weights and measures of capacity shall not be marked in both Imperial and metric denominations.[1] Platform machines[2] and weigh-bridges used for weighing Imperial and metric denominations shall bear on the pillar an inscription showing plainly that they may be used for this dual purpose. All iron metric weights, including counterpoise weights on weighing machines, shall be of hexagonal shape; and all other metric weights shall be either cylindrical, hexagonal, flat, or wire. In cylindrical weights the height of the cylindrical portion shall be approximately equal to the diameter.

No iron weight below 100 grammes is allowed.

Measures marked with the temperature at which they are graduated shall be tested against measures standardized at the same temperature.

Signed by Order of the Board of Trade the 27th day of August, 1907.

H. LLEWELLYN SMITH,

Secretary to the Board of Trade.

[1] This would not be possible, as the denominations permitted do not correspond. It must refer to graduated measures only.

[2] In platform machines dual weighing is possible, as two scales can be constructed, but the divisions on the scales cannot correspond.

TABLE A.

Summary of Outdoor Inspection.

Number of places liable to inspection.	Number of places visited.	Number visited once.	Number visited more than once.	Total number of visits.	Classification of weights examined.						Classification of measures examined.								Classification of weighing instruments examined.									
												Capacity.																
												Liquid.																
					Avoir.	Troy.	Apoth.	Decimal grain.	Metric.	Total.	Length.	Metal.	Earthenware.	Glass.	Apoth.	Dry.	Metric.	Total.	Beam-scales.	Counter machines.	Steelyards.	Spring balances.	Dead-weight machines.	Platform machines.	Weighbridges.	Other instruments.	Metric.	Total.
																												Correct.
																												Incorrect.

Particulars of Prosecutions.

No.	Trade.	Nature of Offence.	Act and Section.	Result.
1				
2				
3				
4				
5				
6				
7				
8				
9				
10				
11				
12				
&c.				

TABLE B.

Summary of Indoor Verification.

Classification of weights stamped.						Classification of measures stamped.								Classification of weighing instruments stamped.									
							Capacity.																
							Liquid.																
Avoir.	Troy.	Apoth.	Decimal grain.	Metric.	Total.	Length.	Metal.	Earthenware.	Glass.	Apoth.	Dry.	Metric.	Total.	Beam-scales.	Counter machines.	Steelyards.	Spring balances.	Dead-weight machines.	Platform machines.	Weighbridges.	Other instruments.	Metric.	Total.

Number of Weights, Measures, and Weighing Instruments Rejected, and Number of Weights and Measures Adjusted by the Inspector.

Rejected.			Adjusted by the Inspector.	
Weights.	Measures.	Weighing Instruments.	Weights.	Measures.

Abstract of Fees Received.

Stamping Fees.																							
Weights.			Measures of Length.			Measures of Capacity.									Weighing Instruments.			Adjusting Charges.			Total.		
						Glass.			Earthenware.			Other Measures.											
£	s.	d.	£	s.	d.	£	s.	d.	£	s.	d.	£	s.	d.	£	s.	d.	£	s.	d.	£	s.	d.

Staff.

Name of Inspector of Weights and Measures.	Number of Local Verification Stamp.	Date of Appointment.	Number of Certificate of Qualification.	Other Occupation, if any.	Salary as Inspector of Weights and Measures.

Statement of Income and Expenditure.

Income.	£	s.	d.	Expenditure.	£	s.	d.
To fees for stamping, &c., &c.				By salaries, &c., &c.			

TABLE C.

PERMISSIBLE ABBREVIATIONS OF DENOMINATIONS.

Imperial Weights and Measures.

Measures of Length.

Yard	yd.
Foot	ft.
Inch	in.

Apothecaries' Measures.

Fluid ounce	fl. oz.	or symbols.
Fluid drachm	fl. dr.	
Minim	min.	

Weights.

Hundredweight	cwt.
Pound	lb.
Ounce (avoirdupois)	oz.
Ounce (troy)	oz. tr.
Ounce (Apothecaries')	oz. Apoth.
Dram	dr.
Grain	gr.
4 drachms	ʒ iv.
2 drachms	ʒ ij.
1 drachm	ʒ i.
2 scruples	℈ ij.
1½ scruples, or half a drachm	ʒ ss
1 scruple	℈ i.
half a scruple	℈ ss

Metric Weights and Measures.

Metre	m.	Cubic centimetre	c.c.
Decimetre	dm.	Cubic millimetre	c. mm.
Centimetre	cm.	Kilogram	kilog. *or* kg.
Millimetre	mm.		
Litre	lit.	Gramme	grm.
Decilitre	dl.	Decigram	dg.
Centilitre	cl.	Centigram	cg.
Millilitre	mil.	Milligram	mg.

TABLES OF ERRORS PERMISSIBLE.

Table I.

Imperial Measures of Length.

—	Error allowed. In Parts of an Inch.			
	End Measures.		*Line* Measures.	
	Long, or in Excess.	Short, or in Deficiency.	Long, or in Excess.	Short, or in Deficiency.
Metal:				
100 feet to 50 feet . .	—	—	0·3	0·3
Under 50 feet to 10 feet .	—	—	0·2	0·2
Under 10 feet and above 3 feet . .	—	—	0·05	0·05
3 feet to 1 foot inclusive .	0·03	0·015	0·02	0·01
Under 1 foot .	0·01	0·01	0·005	0·002

On other than metal measures twice the above amounts may be allowed.

Table II.

Imperial Liquid Measures of Capacity.

Capacity of Measure to the graduation tested.	Error in excess only.
32 gallons to 20 gallons	10 fluid ounces.
Under 20 gallons to 8 gallons . . .	5 ,, ,,
Under 8 gallons to 4 gallons . . .	3 ,, ,,
3, 2, and 1 gallons	2 ,, ,,
Half gallon and quart	1 fluid ounce.
Pint	4 ,, drachms.
Half pint	3 ,, ,,
Gill	2 ,, ,,
Half gill	1 ,, drachm.
Quarter gill	½ ,, ,,
	1 fluid ounce = 437½ grains.
	1 pint = 20 fluid ounces.

On conical shaped metal measures, only one-half the above amounts of error shall be allowed.

On milk churns of 32 to 4 gallons, inclusive, double the above amounts of error shall be allowed.

On measures of enamelled-metal, glass and earthenware, where the capacity is defined by the brim, of a capacity above half-pint, twice the above amounts of error shall be allowed, and of half-pint capacity a five per cent. error in excess only shall be allowed.

Table III.

Imperial Apothecaries' graduated Glass Measures.

1. Cylindrical and Conical Shape.

Approximate internal diameter of measure at the graduation tested.	Error in excess or in deficiency.
Inches.	Minims.
4	25
3½	21
3	18
2½	14
2	11
1¾	9
1½	7
1¼	6
1	4
⅞	3
¾	2
⅝	1
½	½

2. Glass Flasks and Burettes.

On glass flasks and burettes only one-half the above amounts of error shall be allowed.

Table IV.

Imperial Dry Measures of Capacity.

Denomination.	Error in Excess only.
4 bushels	1 pint = 35 cu. in. approx.
1 bushel	½ ,, = 17½ ,, ,,
½ ,,	½ ,, = 17½ ,, ,,
1 peck	1½ gills = 13 ,, ,,
1 gallon	1½ ,, = 13 ,, ,,
½ ,,	1 gill = 8½ ,, ,,
1 quart	½ ,, = 4¼ ,, ,,
1 pint	¼ ,, = 2 ,, ,,
½ ,,	⅛ ,, = 1 ,, ,,

Table V.

Imperial Avoirdupois Weights.

Avoirdupois.	Error in Excess only.	
	Iron weights.	Other than iron weights.
100 lb.	100 grains.	50 grains.
56 lb.	60 ,,	30 ,,
50 lb.	55 ,,	27·5 ,,
28 lb.	40 ,,	20 ,,
20 lb.	30 ,,	15 ,,
14 lb.	24 ,,	12 ,,
10 lb.	20 ,,	10 ,,
7 lb.	16 ,,	8 ,,
5 lb.	14 ,,	7 ,,
4 lb.	12 ,,	6 ,,
2 lb.	8 ,,	4 ,,
1 lb.	4 ,,	3 ,,
8 oz.	4 ,,	2 ,,
4 oz.	4 ,,	2 ,,
2 and 1 oz.	—	1 grain.
8 drams to ½ dram	—	0·5 ,,

Table VI.

Imperial Troy Bullion Weights.

Troy Bullion Weights.	Error in Excess only.
500 to 300 ounces, inclusive	5 grains.
200 and 100 ounces	4 ,,
50 and 40 ounces	2 ,,
30 and 20 ounces	1 grain.
10 ounces	0·7 ,,
5 ounces	0·5 ,,
4 and 3 ounces	0·4 ,,
2 ounces	0·3 ,,
1 ounce	0·2 ,,
0·5 to 0·1 ounce, inclusive	0·1 ,,
0·05 to 0·02 ounce, inclusive	0·05 ,,
0·01 ounce	0·02 ,,
0·005 to 0·001 ounce, inclusive	0·01 ,,

Table VII.

Imperial Apothecaries' Weights.

Apothecaries' Weights.	Error in Excess only.
10 ounces troy	0·7 grain.
8 ,, ,,	0·6 ,,
6 ,, ,,	0·5 ,,
4 ,, ,,	0·4 ,,
2 ,, ,,	0·3 ,,
1 ounce ,,	0·2 ,,
4 drachms 2 ,, 1 drachm	0·1 ,,
2 scruples	0·08 ,,
1½ ,,	0·07 ,,
1 scruple	0·06 ,,
½ ,,	0·05 ,,
6 grains	0·04 ,,
5 ,, 4 ,, 3 ,,	0·02 ,,
2 ,, 1 grain ½ ,,	0·01 ,,

Table VIII.

Imperial Grain Weights.

Grain Weights.	Error in Excess only.
4000 and 2000 grains	0·5 grain
1000 and 500 grains	0·2 ,,
300 to 100 grains, inclusive	0·1 ,,
72 to 10 grains, inclusive	0·05 ,,
5 and 3 grains	0·02 ,,
2 to 0·5 grains, inclusive	0·01 ,,
0·3 grain	0·005 ,,
0·2 to 0·1 grain	0·002 ,,
0·05 to 0·01 grain, inclusive	0·001 ,,

Table IX.

Metric Measures of Length.

—	Error allowed.			
	End Measures.		Line Measures.	
	Long, or in Excess.	Short, or in Deficiency.	Long, or in Excess.	Short, or in Deficiency.
	mm.	mm.	mm.	mm.
Metal:—				
20 metres	—	—	7·5	7·5
Dekametre or 10 metres	—	—	5	5
Double metre or 2 metres	2	1	1	1
Metre or 1000 millimetres	1	0·5	0·5	0·5
Decimetre or 0·1 metre	0·5	0·25	0·2	0·1
Centimetre or 0·01 metre	0·2	0·1	0·1	0·05
Millimetre or 0·001 metre	0·05	0·025	0·05	0·025

On other than metal measures twice the above amounts of error are allowed.

Table X.

Metric Measures of Capacity.

—	Error in excess only.	
	Liquid Measures (Metal).	Dry Measures (Wood).
	c.c. litre.	c.c. litre.
20 litres	100 or 0·1	300 or 0·3
10 ,, (dekalitre) . . .	75 ,, 0·075	250 ,, 0·25
5 ,, ...	50 ,, 0·05	150 ,, 0·15
2 ,, ...	25 ,, 0·025	100 ,, 0·10
1 litre	15 ,, 0·015	50 ,, 0·05
0·5 ,, ...	10 ,, 0·01	25 ,, 0·025
0·2 ,, ...	5 ,, 0·005	10 ,, 0·010
0·1 ,, (decilitre) . . .	2 ,, 0·002	—
0·05 ,, ...	2 ,, 0·002	—
0·02 ,, ...	1 ,, 0·001	—
0·01 ,, (centilitre) . . .	0·5 ,, 0·0005	—
0·005 ,, ...	0·25 ,, 0·00025	—
0·002 ,, ...	0·1 ,, 0·0001	—
0·001 ,, (millilitre) . . .	0·05 ,, 0·00005	—

On earthenware and glass metric measures (other than apothecaries' measures), and on enamelled-metal measures :—

—	Error in excess only.
	c.c. litre.
5 litres . . .	200 or 0·2
2 ,, . . .	100 ,, 0·1
1 litre . . .	50 ,, 0·05
0·5 ,, . . .	25 ,, 0·025
0·2 ,, . . .	10 ,, 0·01

Table XI.

Metric Cubic Measures.

1. Glass Measures—Cylindrical and Conical Shape.

Approximate internal diameter of measure in millimetres at the graduation tested.	Error in excess or in deficiency.
mm.	c.c.
100	1
90	1
80	0·8
70	0·8
60	0·6
50	0·6
40	0·4
30	0·3
20	0·15
10	0·05

2. Glass Flasks and Burettes.

On glass flasks and burettes only one-half the above amounts of error shall be allowed.

Table XII.

Metric Weights.

—	Error in excess only.	
	Iron weights.	Other than iron weights.
	Milligrams.	Milligrams.
20 kilograms	3000	1500
10 ,,	2000	1000
5 ,,	1000	500
2 ,,	600	300
1 kilogram	500	250
500 grammes	300	150
200 ,,	200	100
100 ,,	200	100
50 ,,	—	50
20 ,,	—	50
10 ,,	—	25
5 ,,	—	25
2 ,,	—	20
1 gramme	—	10
5 decigrams	—	5
2 ,,	—	2
1 decigram	—	1
5 centigrams	—	0·5
2 ,,	—	0·2
1 centigram	—	0·1
5 milligrams	—	0·05
2 ,,	—	0·03
1 milligram	—	0·03

TABLES OF ERROR FOR WEIGHING INSTRUMENTS.

BEAM-SCALES.

Table XIII.

Class A.

Capacity of machine.	Sensitiveness when fully loaded.	Greatest error allowed either in excess or deficiency when fully loaded.
1 oz.	0·05 grain.	0·1 grain.
1 lb.	0·1 ,,	0·2 ,,
7 ,,	0·5 ,,	1·0 ,,
56 ,,	1·5 grains.	2·0 grains.

Table XIV.

Class B.

Capacity of machine.	Sensitiveness when fully loaded.	Greatest error allowed either in excess or deficiency when fully loaded.
1 oz.	$\frac{1}{5}$ gr.	$\frac{1}{5}$ gr.
8 ,,	1 ,,	1 ,,
1 lb.	1 ,,	1 ,,
2 ,,	$1\frac{1}{2}$,,	2 ,,
4 ,,	3 ,,	4 ,,
7 ,,	4 ,,	6 ,,
10 ,,	6 ,,	9 ,,
14 ,,	8 ,,	12 ,,
28 ,,	15 ,,	22 ,,
56 ,,	25 ,,	40 ,,
112 ,,	$1\frac{1}{2}$ drs.	$2\frac{1}{2}$ drs.
224 ,,	$2\frac{1}{2}$,,	$3\frac{1}{2}$,,
above 2 cwt.	add $\frac{1}{2}$ dram for each cwt. of capacity.	add 1 dram for each cwt. of capacity.

Class C.

For Class C instruments multiply the figures for sensitiveness and error in Class B by 3.

Table XV.

COUNTER MACHINES.

Capacity of machine.	Vibrating Machines.	
	Sensitiveness when fully loaded.	Greatest error allowed in excess or deficiency when fully loaded.
1 lb.	20 grains.	30 grains.
2 ,,	28 ,,	1½ drams.
4 ,,	40 ,,	2 ,,
7 ,,	2 drams.	3 ,,
10 ,,	2½ ,,	3½ ,,
14 ,,	3 ,,	4½ ,,
28 ,,	4 ,,	6 ,,
56 ,,	6 ,,	9 ,,
1 cwt.	8 ,,	16 ,,

SPRING BALANCES.

The application of the above table to spring balances shall be in accordance with Regulation 102.

STEELYARDS.

The application of Tables XV. and XVI. to steelyards shall be in accordance with Regulation 106.

Table XVI.

PLATFORM AND DEAD-WEIGHT[1] MACHINES.

Capacity of Machine.	Vibrating Machines.		Accelerating Machines.	
	Sensitiveness when fully loaded.	Greatest error allowed in excess or deficiency when fully loaded.	Greatest error allowed in excess or deficiency when fully loaded.	Weight required to bring back the steelyard from position of greatest displacement when fully loaded.
1 cwt.	½ oz.	1 oz.	1 oz.	2 oz.
3 ,,	1 ,,	2 ,,	2 ,,	4 ,,
5 ,,	1½ ,,	3 ,,	3 ,,	6 ,,
7 ,,	2 ,,	4 ,,	4 ,,	8 ,,
10 ,,	3 ,,	6 ,,	6 ,,	12 ,,
20[2] ,,	5 ,,	10 ,,	10 ,,	20 ,,
30 ,,	6½ ,,	13 ,,	13 ,,	26 ,,
40 ,,	8 ,,	16 ,,	16 ,,	32 ,,
50 ,,	10 ,,	20 ,,	20 ,,	40 ,,

In the above table the load is assumed to be distributed on the platform.

The errors permissible on the verification of platform

machines with dials shall be twice those shown in Table XVI.

The application of this table to crane machines shall be in accordance with Regulation 131.

In the case of all self-indicating Pit Bank weighing machines six times the allowances specified in Table XVI. are permitted.

[1] For this purpose, "Dead-Weight" includes contracted or unequal armed coal machines.

[2] This machine is of the same capacity as the 1 ton weighbridge, and a much greater degree of sensitiveness is required. Similarly for the 40 cwt. and 2 ton machines.

Table XVII.

WEIGH-BRIDGES.

Capacity.	Vibrating Machines.		Accelerating Machines.	
	Sensitiveness when fully loaded.	Greatest error allowed in excess or deficiency when fully loaded.	Greatest error allowed in excess or deficiency when fully loaded.	Weight required to bring back the steelyard from position of greatest displacement when fully loaded.
1 [1] ton.	1½ lb.	1½ lb.	1½ lb.	4 lb.
2 tons.	2 ,,	2 ,,	2 ,,	5 ,,
5 ,,	3½ ,,	4 ,,	4 ,,	10 ,,
10 ,,	5 ,,	6 ,,	6 ,,	15 ,,
20 ,,	7 ,,	10 ,,	10 ,,	25 ,,
25 ,,	8 ,,	12 ,,	12 ,,	30 ,,
30 ,,	8½ ,,	13½ ,,	13½ ,,	34 ,,
35 ,,	9 ,,	15 ,,	15 ,,	37 ,,
40 ,,	9½ ,,	16 ,,	16 ,,	40 ,,
50 ,,	10 ,,	18 ,,	18 ,,	45 ,,
75 ,,	12 ,,	23 ,,	23 ,,	58 ,,
100 ,,	14 ,,	28 ,,	28 ,,	70 ,,
200 ,,	18 ,,	42 ,,	42 ,,	105 ,,

[1] *See* note 2, above, to last table.

In the above table the load is assumed to be distributed on the platform.

The errors permissible on the verification of weigh-bridges with dials shall be twice those shown in Table XVII.

The application of this table to crane machines shall be in accordance with Regulation 131.

SCHEDULE.

INSTRUCTIONS[1] TO INSPECTORS OF WEIGHTS AND MEASURES.

General.

1. In these Instructions "the Act" means the Weights and Measures Act of the year named.

2. No person can be appointed by the local authority to act as an inspector of weights and measures unless he has obtained a certificate of qualification from the Board of Trade (section 8 of the Act of 1904). Every inspector, as soon as he is appointed, must enter into a recognizance to the Crown in the sum of £200 for the due performance of his duties (section 43 of the Act of 1878). The penalty for any breach of duty imposed by the Weights and Measures Acts or the Board of Trade Regulations under the Act of 1904 is a fine not exceeding £5 (sections 49 of the Act of 1878 and 5 (4) of the Act of 1904). No inspector must be financially interested in the making, adjusting, or selling of weights, measures, and instruments (section 12 (1) of the Act of 1889).

Section 8 (3) of the Act of 1904 provides that no person other than an inspector duly appointed under the Weights and Measures Act should act as such inspector, under a penalty of £10, or £20 for a repeated offence.

The inspector must accordingly be careful never to relegate to an assistant any of his statutory duties in such a way that the assistant could be held to be acting independently as

[1] These instructions form no part of the Statutory Regulations, although many of them are of such a nature that they might properly have been included therein. Many of them are very useful, as they summarize or call attention to duties imposed either on the Inspectors or Local Authorities by the Acts. No duty not otherwise imposed can be created by these Instructions. *See* note to sect. 5 of the Act of 1904, *ante*, p. 241.

an inspector. Assistants should act throughout under the personal and immediate supervision of an inspector.

3. In addition to the Weights and Measures Acts, and the Orders in Council and Regulations thereunder, the inspector must make himself familiar with the provisions of certain other Acts which are enumerated below, so far as they may have application to his duties.

[*A list of sections of Acts, and summaries of some of them, were here given. That list consisted of all those that are set out in this book.*]

The inspector should keep records of his proceedings[1] under any of the above Acts.

[1] When acting under sect. 15 of the Coal Mines Regulation Act, 1887 (*post*, p. 329), or sect. 117 of the Factory and Workshop Act, 1901 (*post*, p. 330), the inspector is enforcing the Weights and Measures Acts and must keep records in the same manner as in the case of his other duties under these Acts.

4. The notices issued from time to time by the Board of Trade with respect to patterns of weights, measures, and instruments submitted under section 6 of the Act of 1904, should be carefully kept by the inspector for reference, and the chief inspector of a district should see that each inspector acting under him is supplied with copies.

The inspector should, further, read the Reports of proceedings of the Board of Trade under the Weights and Measures Acts, and the memoranda issued from time to time by the Department for the information of inspectors.[1]

[1] These reports and memoranda should be supplied to him either by the Board of Trade or by the Local Authority as part of his outfit. The inspector cannot be compelled to purchase them at his own expense.

5. The inspector shall keep an "Inspection Book," a "Working Diary," and a "Certificate of Verification" book provided with column for insertion of fees, in such forms as to be suitable for the compilation of his annual reports.[1]

[1] There are no means for enforcing this instruction, as the penalties for misconduct apply only to breach of the Regulations. This appears a matter as to which the local authorities should make their special regulations under sect. 5 (2) of the Act of 1904, *ante*, p. 241.

6. The inspector must not recommend, either directly or indirectly, any particular scale-maker or tradesman for the purchase, provision, repair, or adjustment of any weight, measure, or instrument, and shall not in his office exhibit the advertisement of any scale-maker or tradesman who supplies, repairs, or adjusts weights, measures, or instruments.

7. No inspector shall wilfully disclose or cause to be disclosed, directly or indirectly, the secrets of the business of any manufacturer or trader, of which secrets the inspector has become possessed in the performance of his duties, or otherwise betray the confidence of his office.[1]

8. In no case shall the inspector accept any gratuity or reward from any manufacturer or trader.[1]

[1] Such actions as are here forbidden would probably, quite apart from these Instructions, constitute on the part of an inspector misconduct "in the execution of his office" within sect. 49 of the Act of 1878, *ante*, p. 174.

9. The inspector's duties under the Weights and Measures Acts fall generally under the heads of (1) the safe and proper custody of the standards and inspector's equipment, and (2) verification, and (3) inspection (section 43 of the Act of 1878).

Custody of Standards and Equipment.

10. The inspector must cause all the local standards provided for his use to be duly verified or re-verified in accordance with the provisions of sections 37 and 41 of the Act of 1878.[1]

Where local standards are re-verified locally, under the provisions of section 41, the limits of error permitted are those specified by Order in Council.[2]

The inspector must, at least once in every quarter, make a careful examination of the local standards and instruments with a view to seeing that they are complete, clean, and in good condition; and shall on each occasion enter a note thereof in a "Record of Standards" Book. All boxes should at the same time be overhauled, and the locks and fittings repaired where necessary.

[1] The inspectors are not officials of the Board of Trade but of the Local Authorities. They cannot verify local standards under

sect. 37 (*ante*, p. 165), which must be done by experts of the Standards Department. But under sect. 41 (*ante*, p. 167) they may from time to time make local comparison of the local standards to ascertain if they remain correct.

[2] The existing Order in Council with reference to this matter is that of the 21st December, 1907.

11. The accuracy of working standards shall be verified, and, at intervals of not more than six months, re-verified, by the inspector, who shall adjust them to agree with his local standards.[1] A record of such verification shall be entered in the "Record of Standards" Book in the presence of a witness. The entry may be in the form shown in Appendix 1.

[1] This Instruction is made under sect. 7 of the Act of 1889 (*ante*, p. 212). It might have been added to Reg. 5, *ante*, p. 251.

12. The inspector is not to allow the standards, balances, and other apparatus placed in his charge to pass from under his control, or to be used for any purpose by any one except himself or his assistants.[1] When oil is used for cleaning any of the standards, it must be carefully wiped off to prevent its oxidizing or drying on the standards. In keeping standards clean, it should be distinctly understood that no polishing material of any kind should be used; a dry duster or other like means only should be employed.

The inspector should see that every care is taken in the handling of the standards and balances, so as to avoid undue wear and tear.

[1] Such conduct as is here prohibited would probably be held, quite apart from these instructions, to constitute misconduct within sect. 49 of the Act of 1879, *ante*, p. 174.

13. For the general duties of his office, the inspector should have at his disposal an outfit of tools, including stamping blocks, hammers, bench vice, drills, files, pliers, spirit level, etc. There should be arrangements for suspending large beam-scales; and also a seed-hopper for testing dry measures of capacity.

Proper cases should be provided for all standards and beams; and when the standard weights and measures are not in use, they should be carefully cleaned and placed in a press

lined with baize or some similar material and fitted with glass doors. A press having an internal elevation of about 7 feet 6 inches may be divided by shelves according to the needs of the office. It should be so placed as to face the verification room.

Slate slabs, used when testing glass and other measures, should be fixed beside the sink.

For the proper testing of weighing instruments, the inspector's office should be provided with level plates securely and truly fixed.

14. In order to prevent improper or unauthorized use of stamps of verification, an inspector must—

(*a*) Keep an accurate inventory of all his stamps and stencils and check it at frequent intervals;

(*b*) Keep all stamps and stencils under lock and key when not actually being used;

(*c*) Deface without delay all worn-out stamps and stencils;

(*d*) Report immediately to his authority the loss of any stamp or stencil.

Stamps or stencils, supplied to the order of the local authority or inspector, and rejected, must be defaced to the satisfaction of the inspector after the grounds for rejection have been explained to the maker. Where more than one inspector is acting in the same district, the stamps of each inspector should be distinguished by a separate number or otherwise.

15. The verification punches may be either die-sunk or of the ordinary cutting-type. Punches of one, three-quarters, one-half, three-eighths, quarter, and one-eighth inch make up a generally convenient series. They should be kept clean, preferably with a small wire brush, so as to ensure a clear impression and to protect them from injury. A cutting punch which is clogged, when used upon a hard material, is more liable to fracture.

16. The minimum amount of floor space which is required in any inspector's office is approximately 500 square feet. Further details as to equipment will depend upon the special requirements of the district.

17. Where a local authority provide and maintain public weighing instruments or standards of weight or length, it will be part of the inspector's duties to inspect and test those instruments and standards from time to time.

Inspection.

18. Under the Weights and Measures Acts, every weight or measure for use in trade must be of the denomination of a Board of Trade standard, and all weights, measures, and weighing instruments for use in trade must be stamped by an inspector. (*See* sections 8, 19, and 29 of the Act of 1878 and section 1 of the Act of 1889.)

A list of all existing denominations of Board of Trade standards is given in Appendix 2.

19. Under section 48 of the Act of 1878, an inspector authorized in writing under the hand of a justice of the peace is empowered to enter any place within the district for which he is appointed where he has reason to believe that there are any weights, measures, or weighing instruments for use in trade, to inspect and test them and to seize and detain any that are liable to forfeiture.

20. Weights and measures are liable to forfeiture if—

(1) they are not of the denomination of a Board of Trade standard (section 24 of the Act of 1878);
(2) they are false or unjust (section 25);
(3) wilful fraud is committed in using them (section 26);
(4) they are unstamped (section 29);
(5) the stamp on them is forged (section 32), or transferred (section 10 (1) of the Act of 1904).

Weighing instruments are liable to forfeiture in cases (2), (3), and (5), but not in cases (1) and (4). (*See* section 1 of the Act of 1889.)

As a general rule, any weight, measure, or weighing instrument liable to forfeiture, which is to be the subject of court proceedings, should be seized and detained by the inspector, so that the courses open to be followed by the court may not be prejudiced.

21. Section 48 of the Act of 1878 further provides as follows :—

[*The concluding paragraph of sect.* 48, ante, p. 173, *was here set out.*]

22. When visiting the premises of a trader, the inspector will, if so required by the trader or his representative, produce his warrant under the hand of a justice of the peace to inspect within his jurisdiction.[1] In Ireland, in the case of ex-officio inspectors, no such warrant is required.

The inspector should first examine the weights, measures, and instruments in the condition in which they are being used, with a view to seeing they are not unjust. He should then (except where he seizes and detains them as liable to forfeiture) proceed, where necessary, to test them in accordance with the Regulations.

In testing any weight, measure, or instrument examined by him, the inspector should make use of the local standards,[2] or approved working standards, but need not test a weight or measure, provided he is satisfied that no change has taken place therein, since the weight or measure was last verified.

As far as possible, special surprise visits should be made at times when an ordinary official visit is not expected, so that traders may know that they are liable to inspection at any time.

[1] This was pointed out in former editions of this book. It is doubtful if the entry of the inspector will be legal unless he has the warrant in his possession at the time.

[2] The use of local standards in Ireland is regulated by Part V. of the Weights and Measures Act, 1878.

23. The inspector will remember that weights, measures, and instruments duly stamped are legal throughout the United Kingdom, unless found to be false or unjust (Sections 45 of the Act of 1878 and 15 of the Act of 1904). He must not therefore require weights, measures, and instruments to be re-stamped merely because they have been stamped in another district, if they are within the prescribed limits of error.

When an inspector finds cause to object to a weight,

measure, or instrument which has been stamped by an inspector of another district, he should, as a rule, communicate to the inspector concerned the grounds of his objection.

24. No weight, measure, or instrument, being the property of the Crown, is liable to inspection or verification, but an inspector may examine any weight, measure, or instrument upon premises used for trade to ascertain if it bears a mark indicating that it is Crown property.[1]

[1] The inspector is justified in examining weights, etc., *until* he is informed they are Crown property. On finding weights, etc., in use for ordinary trade in a Post Office shop he is entitled to assume they are the tradesman's property until on closer examination he finds the Crown mark upon them.

25. In dealing with infringements of the Acts, the inspector should take into consideration the effect of the offence as regards both buyer and seller, and the explanation, if any, offered by the person committing the offence.

In cases which appear to involve the fraudulent use of a weight, measure, or instrument, or intent to defraud on the part of the trader, the inspector in coming to a conclusion thereon, should have regard to the position of the weight, measure, or instrument, particularly whether it is in full view of the purchaser or not, and in general to the manner in which it is being used.

In considering the limit of error beyond which a weight, measure, or instrument is to be treated as false or unjust, or as being in use for the purpose of fraud, the inspector must be guided by the particular trade or purpose for which it is found to be in use.

Where an offence has been committed which appears to the inspector to call for prosecution, legal proceedings should be taken as soon after the detection of the offence as possible.

Section 14 of the Act of 1904 empowers an inspector to undertake summary prosecutions for any offence under the Weights and Measures Acts with the consent of his authority. It has been held that a general covering consent is sufficient under this section.[1]

[1] *See* note, *ante*, p. 248.

26. Upon the request of a trader or purchaser, an inspector may test the weight of any article, goods, or material upon the payment of the reasonable costs, if any, by the person making the request; such costs to be accounted for to the authority.

27. In regard to the testing of weighing instruments and weights found by the inspector in use for the sale of coal, particular provisions are contained in Part II. of the Act of 1889.

Verification.

28. Section 44 of the Act of 1878 describes the inspector's duties under the head of verification as follows :—

[*The whole section* (ante, p. 170), *was here set out.*]

Section 12 of the Act of 1904 applies the above section to weighing instruments and adds that, for the purposes of the two sections, "any person having his principal place of business within any district shall be deemed to reside in that district, although he in fact is not resident there."

Section 42 of the Act of 1878 provides that—

[*The whole section* (ante, p. 169), *was here set out.*]

29. A weighing instrument, if it has a dead weight of not more than 2 cwt., should be verified at the inspector's office, or, in the case of a heavier weight, on the premises of the trader or of the maker of the instrument, provided, nevertheless, that on the written request of any trader or maker the inspector may attend on the premises of such trader or maker for the purpose of testing weights or weighing instruments.

30. In the verification and stamping of a weighing instrument on the premises of a trader or maker, the additional cost of cartage, carriage, and lifting of standards, and travelling expenses to be paid by the applicant, is such as may be determined by the authority concerned. The said cartage and lifting may be done by the inspector or he may require it to be done by the owner or the maker. An official receipt should be given by the inspector on the payment of such expenses.

31. In the verification of weights and measures, a weight or measure which is of the same denomination as one of the local standards must be compared with the corresponding local or working standard; *e.g.* a 1 lb. weight shall be compared with *one* standard, bearing the denomination "1 lb."[1]

No weight or measure can be stamped unless it has the denomination stamped on it in accordance with sections 28 of Act of 1878 and 13 (1) of the Act of 1904.

[1] The reason is to avoid accumulative error of local or working standard; *e.g.* 7 lb. local standard is allowed 2 gr. error, 1 lb. ·5 gr. If 7 lbs. were compared with 7 standards of 1 lb. each the error in latter might be up to 3·5 grs.

32. Section 70 of the Act of 1878 defines stamping as including "casting, engraving, etching, branding, or otherwise marking, in such manner as to be so far as practicable indelible."

The mark indicating the date of stamping, if it does not form part of the verification stamp, should be placed close thereto: it should not be placed between the letters E.R. and the number denoting the district. Where necessary, the inspector should set forth in his annual report the date mark or marks used during the period covered by the report.

33. Stamping fees must be charged by the inspector on the stamping of a weight, measure, or instrument, according to the scales specified by Order in Council.[1]

[1] Dated 21st December, 1907, set out, *ante*, p. 231.

34. An inspector has no power to detain a weight, measure, or instrument which cannot be stamped or re-stamped, except with the consent of the owner.

If the owner refuses his consent, he should in every case be fully warned of the penalties to which the person who uses such a weight, measure, or instrument will render himself liable.

35. In addition to the cases for which express provision is made in the Regulations, whenever a weight, measure, or instrument which appears to the inspector to be of a pattern which might facilitate the perpetration of fraud, is submitted for stamping, the inspector must decline to stamp it until it

has been submitted to the Board of Trade under Section 6 of the Act of 1904.

36. Any weight, measure, or instrument as to which a certificate has been given by the Board of Trade under that section, must be examined, verified and inspected in the ordinary way, so as to see that it satisfies the requirements of the Regulations, including any supplementary Regulations that may be made with reference to the particular pattern in question.

37. Section 12 of the Act of 1889 provides as follows :—

[*This section* (ante, p. 214), *was here set out in full.*]

An inspector shall not adjust weights or measures except with the special authority of the Board of Trade, and in conformity with any rules which may be issued by the Board.

In considering an application made under sub-section (2) above by a local authority for authorization for their inspector of weights and measures to act as an adjuster of weights and measures, or for the renewal of any temporary authorization which may have been granted, the Board will require to be satisfied that the inspector is provided with sufficient local standards which have been verified within the periods prescribed by section 41 of the Act of 1878, that he has suitable office accommodation, that his scale-beams are of the approved pattern and have been recently verified, that he has an adequate instrumental equipment, and that the additional work imposed upon him in connection with adjusting will not interfere with or impair the proper performance of his statutory duties of verification and inspection. All adjusting fees received by the inspector shall be paid over to the local authority.

Any inspector who, on 1st January, 1907, had already been permanently authorized to act as an adjuster of weights and measures, will be permitted to continue so to act, provided that the above conditions are satisfied in his case.

An authority granted to any Chief Inspector of weights and measures does not permit adjusting to take place under

the superintendence of one of his assistants, who is not so authorized.

The Board of Trade will not in future grant any new authority for an inspector of weights and measures to act as an adjuster of weights and measures unless he holds a certificate of qualification as provided for under section 8 of the Act of 1904.

An inspector shall not require a weight or measure to be adjusted unless on examination and testing it is found to be incorrect. The authority granted by the Board will be liable to be withdrawn if the inspector fails to observe this requirement, or if at any time he adjusts, or causes to be adjusted, any weight or measure in a manner not approved by the Board.

Under the provisions of sub-section (1) of section 12 of the Act of 1889 an inspector is prohibited from adjusting measuring instruments or weighing instruments.

Measures of Length.

38. To determine the tension or pull in testing a tape, riband, or linked measure, the inspector may use a spring balance or other suitable means where it is impracticable to employ a dead-weight on a pulley.

39. In the stamping of wooden measures of length of circular section, the use of a metal block provided with two holes communicating with each other at right angles, one to receive the end of the measure and the other to admit the verification punch, will facilitate the marking thereon of a complete impression of the stamp, and will lessen the liability of damaging the measure.

Liquid Measures of Capacity.

40. The inspector should be careful in all cases to ascertain that measures are sufficiently strong and rigid to withstand constant use without variation, and that they stand firmly on a level plane. In particular, the bottom of the

measure should be so strong as not to be easily indented or raised in any way.

41. For the purpose of ascertaining whether a measure of capacity completely empties itself when tilted to an angle of 120° from the vertical, a revolving base fitted with a circular protractor may be used, or any other arrangement whereby the prescribed displacement can be properly determined.

42. Where the capacity of the standard is defined by the brim, the inspector should make sure that it is exactly full, neither more nor less, by passing a glass strike completely over it.

After pouring (or in the case of some of the larger measures transferring by a siphon) the contents of the standard as completely as possible into the measure under verification, the water that still remains should, where great accuracy is required, be taken up by means of a pipette and transferred to the measure.

When the contents of the standard have been emptied into the measure, a strike should again be used in cases of doubt or where great accuracy is required.

43. Before proceeding to test milk churns and other large measures of capacity, they should be rinsed out with water.

44. When testing apothecaries' measures, it is advisable that they should be placed upon an adjustable stand, so that the graduations under observation may be brought into line with the inspector's eye.[1]

[1] *See* pars. 180–187, *ante*, p. 111.

45. The errors on liquid measures of capacity may conveniently be estimated by means of displacement plungers the volume of which has been carefully fixed.[1]

[1] *See* par. 188, *ante*, p. 114.

46. In addition to glass metric measures graduated at 4° Centigrade, measures graduated at 15·5° Centigrade or 60° Fahrenheit may also be verified for pharmaceutical or chemical purposes, or for volumetric estimations.

Dry Measures of Capacity.

47. The limits of variation of the diameters of dry measures in relation to the depth in accordance with Regulation 44 are in certain cases as follows :—

Capacity.	Diameter equal to depth.		Diameter double the depth.	
	Standard (approx. diameter).	Allowable limit (diameter).	Standard (approx. diameter).	Allowable limit (diameter).
	inches.	inches.	inches.	inches.
Bushel.	14·14	13·43 to 14·85	17·81	16·92 to 18·70
½ bushel.	11·22	10·66 ,, 11·78	14·14	13·43 ,, 14·85
Peck.	8·91	8·46 ,, 9·36	11·22	10·66 ,, 11·78
Gallon.	7·07	6·72 ,, 7·42	8·91	8·46 ,, 9·36
½ gallon.	5·61	5·33 ,, 5·89	7·07	6·72 ,, 7·42
Quart.	4·45	4·23 ,, 4·67	5·61	5·33 ,, 5·89
Pint.	3·54	3·36 ,, 3·72	4·45	4·23 ,, 4·67
½ pint.	2·81	2·67 ,, 2·95	3·54	3·36 ,, 3·72

48. Instruction 40 relating to the strength, etc., of liquid measures will apply also to dry measures.

49. A strike should be used for the purpose of levelling the seed both in the standard and the measure under verification. It should be preferably of oak, round, and 1½ inches in diameter. It should be swept, not rolled across the measure.

The seed should be levelled as quickly and as lightly as possible, in order to prevent it settling unduly. Care should be exercised not to spill any of the seed, and it should be understood that any vibration affecting the measure under examination will vitiate the test.

If the seed has been lying unused prior to its employment for testing purposes, it should be passed through the hopper at least six times before the test is applied.

50. Dry measures of capacity of a bushel and under, of cylindrical shape, made of wood or of wicker or other open material, may generally be tested with sufficient accuracy for inspection purposes by means of a standard gauge, when it is not convenient for the inspector to carry his standards with him. The gauge, which should be verified by the Board of Trade, carries two scales; on one side there are engraved

divisions, marked "diameter," and on the other side are engraved divisions marked "depth." The gauge may be used as follows:—Measure the diameter of the measure in two directions, crossing each other at right-angles, and if there is any difference, the mean of the two is to be taken. On the side marked "depth," measure the depth of the measure. This can be done in several places, laying a straight edge across the rim for taking the depth near the centre. If there is any difference in the depth so taken, the mean is to be used. When the dimensions do not exactly correspond with the division lines on the rod, the fractions of the divisions may be estimated with sufficient accuracy. If the measures are correct, the depth added to the diameter, as shown by the gauge rod, will be 30 for a half-pint, 40 for a pint, 50 for a quart, 60 for a half-gallon, 70 for a gallon, 80 for a peck, 90 for a half-bushel, and 100 for a bushel.

A second form of gauge, 20 inches in length from end to end, made with a bevelled edge on which the scale of inches is marked, the inches being divided into tenths and fiftieths of an inch throughout, may also be used. By means of this gauge may be calculated the limits set out in the Table of Variation of the diameters of dry measures above referred to.

This method of applying one kind of standard, that of length, to the testing of another kind, that of capacity, cannot, however, be alone adopted where legal informations have to be laid, and is of course inadmissible on verification.

Weights.

51. Coin weights, or weights representing the standard and least current weight respectively of each coin of the realm, or bankers' sovereign weights, must not be stamped by the inspector. (*See* section 31 of the Act of 1878.)

52. New iron weights should be tapped with a hammer to ensure that they have no flaws.

53. The inspector will note that no method of adjustment of avoirdupois weights other than the insertion of lead in an adjusting hole is permitted. He must therefore refuse to stamp iron ring weights which have lead run round the ring

or in a groove surrounding the ring. Lead in an adjusting hole should be properly and securely set down.

54. Before proceeding to test weights, it should be ascertained that they are properly denominated and that their condition conforms to the requirements of the Regulations. The inspector should also see that his balance is in true equipoise and be satisfied as to its accuracy of adjustment. The capacity of the balance should be suitable to the size of the weight under test. Where a large number of weights are being dealt with, the inspector should, from time to time, satisfy himself that the equipoise of his balance has not been disturbed by an accumulation of dust, etc. It should also be noted that the balance is free from disturbing influences.

In the verification of weights, the weight may be compared directly with the standard, but the most accurate procedure is as follows [1] :—

Place the standard in one pan.

Place a counterpoise (which may consist of any suitable material) in the other pan, so that the balance exactly indicates zero.

Remove the standard from the first pan and in its place put the weight to be compared.

If the balance does not remain at zero, add (unless the compared weight is found to have an error in deficiency) difference grain weights to the pan containing the counterpoise, to ascertain whether the compared weight is within the amount of error tolerated in excess.

It will be convenient in many cases to use counterpoises specially made and adjusted [2] to the amounts of the various permissible errors.

When placing weights in the pan or when removing them from it, pan rests should be used.

[1] *See* pars. 63–65, *ante*, p. 36.

[2] Unless this be very accurately done an element of error may be introduced, as these special counterpoises should be within the limits of error allowed in local standards.

Weighing Instruments.

55. The testing of weighing instruments will be facilitated by the inspector providing himself with counterpoises adjusted to the amounts of the sensitiveness or error allowance prescribed, where these do not coincide with the weights of a Board of Trade denomination.

56. The hardness of steel-bearing surfaces should be tested by the application of a superfine smooth file. The steel should be so hard that such a file will not scratch it. This operation should be carried out with special care, so as not to injure the knife-edge. Smooth files of the half-round and rat-tail shape will be found generally convenient.

57. In the verification of weighing instruments, as in the testing of weights, the inspector should, as far as he can, eliminate disturbing influences.

58. In considering whether a weighing instrument is likely to facilitate fraud, the inspector should pay particular attention to the condition of the pans or plates. In the case of new instruments, earthenware goods-pans or plates which are chipped, broken, or split, are not permissible; nor should the enamel be crazed or cracked or otherwise injured, so that the earthenware can absorb water; but on re-verification, an inspector may exercise his discretion in regard to pans or plates which are slightly chipped. He must ascertain in all cases that the beam is made of metal sufficiently strong and rigid to prevent springing or other deformation under the maximum load.[1]

Where in a spring balance a vertical slide is used, the indications at a given load should be clearly in view.

In testing spring balances the inspector should see that the index works freely, and that there is no friction between the spring and the case that might become a source of error.

In testing steelyards the inspector should see that the suspension hook and swivel are not so constructed that they can be manipulated so as to alter the indications of the instrument.

When reading the graduations of an instrument with a

dial, the inspector should stand as nearly as possible directly in front of the graduation under observation.

In stamping a steelyard, care must be taken to avoid bending or in any way changing the form of the arm.

Counterpoise weights should not be marked with a date stamp until the whole process of verification of the instrument with which they are to be used is complete.

Platform weighing machines shall only be stamped if the foundation or supporting base is sufficiently firm and capable of carrying, without change of level or of form or other disturbance, the maximum load.

The stamp should not be placed upon the pans, scoops, or platforms of weighing instruments.

[1] *See* pars. 51–53, *ante*, p. 27.

59. A new weigh-bridge, or a dormant platform machine, should, on the request of the maker, and upon his undertaking to pay the expenses thereof duly certified, be tested on his premises to its full weighing capacity. For the purpose of such test the inspector may use the maker's testing weights or blocks, provided that he has satisfied himself as to their accuracy by verifying them on an approved weighing instrument by comparison with working standards. The machine should not be stamped, but a certificate of preliminary test should be given to the maker. The certificate may be in the form shown in Appendix 3. Every such machine should be provided with an identification mark for the purposes of the certificate.

When a railway company, a colliery or other owner provides weights of an approved form, sufficient for testing their machines, such weights may be used by the inspector, provided that he has satisfied himself as to their accuracy by verifying them on an approved weighing instrument by comparison with working standards.

The owner or user should, if required, provide sufficient weight of material for testing the machine above one ton, and should afford the inspector reasonable assistance in lifting the testing weights.

60. In a vibrating weighing machine, if the balance is

correct and the sliding poise at zero, the steelyard should, when repeatedly brought to its lower or upper stop and then released, always return to the horizontal position of rest. If the machine is provided with a dial and not with a steelyard, the machine is balanced if the index always points to zero when there is no load on the platform.

An accelerating machine is balanced when the steelyard on being brought to a horizontal position on its lower stop or carrier will, on being released, gently rise to the full extent of its movement.

61. In testing large weighbridges for weighing loads in motion, it is sufficient to carry out the tests with stationary loads.

62. For the purpose of testing crane machines on the maker's premises, the inspector may use the maker's testing weights or blocks, provided that he has satisfied himself as to their accuracy by verifying them on an approved weighing instrument.

63. An automatic machine must be stamped before being used for trade purposes; but a machine used as a dynamometer or for the determination by weighing of the deflexion or tension of materials is not so required to be stamped.

APPENDIX 1.

Form of Entry for "Record of Standards Book" on the Verification of Working Standards.

I hereby certify that the several [Weights. Measures.]
viz.:—One each of

have been this day duly verified in my presence at
by comparison with the local standards numbered
belonging to the of , in terms of
No. 40 of the "Weights and Measures Regulations, 1907," and have been adjusted to agree with the corresponding local standards.

Inspector of Weights and Measures.

for

Appendix 2.

DENOMINATIONS OF BOARD OF TRADE STANDARDS.

Imperial Weights and Measures.

MEASURES.

Measures of length:
- 100 feet.
- 66 ,, or a chain of 100 links.
- 50 ,,
- 33 ,, or 50 links.
- 20 ,,
- Rod, pole, or perch.
- 10 feet.
- 9 ,,
- 8 ,,
- 7 ,,
- 10 links.
- 6 feet.
- 66 inches.
- 5 feet.
- 54 inches.
- 4 feet.
- 42 inches.
- 3 feet.
- 30 inches.
- 2 feet.
- 18 inches.
- 1 foot.
- Yard (and its parts).
- Inch (and its parts).*

Ante, p. 198.

Measures of capacity:
- Liquid measures:
  - Thirty-two measures from "Thirty-two gallons" to "one gallon" inclusive, by a gallon.
  - Half-gallon.
  - Quart.
  - Pint.
  - Half-pint.
  - Gill.
  - Half-gill.
  - Quarter-gill.
- Dry measures:
  - Four bushels.
  - Bushel.
  - Half-bushel.
  - Peck.
  - Gallon.
  - Half-gallon.
  - Quart.
  - Pint.
  - Half-pint.
- Apothecaries' measures:
  - 40 fluid ounces, to half a fluid ounce. †
  - 16 fluid drachms, to half a fluid drachm. ‡
  - 60 minims, to 1 minim. §

WEIGHTS.

Avoirdupois weights:
- Cental, or 100 pounds.
- 56 pounds, or half-hundred-weight.
- Half-cental or 50 pounds.
- 28 pounds, or quarter-hundred-weight.
- 20 pounds.
- 14 ,, or stone.
- 10 ,,
- 7 ,,
- 5 ,,
- 4 ,,
- 2 ,,
- 1 pound, or 7,000 grains.
- 8 ounces, or half-pound.
- 4 ,, or quarter-pound.
- 2 ,,
- 1 ounce, or 437½ grains.
- 8 drams, or half-ounce.
- 4 ,, or quarter-ounce.

---

* Certain parts and multiples of an inch intended for use as Gauges were legalized by Orders in Council of 26th August, 1881, and 23rd August, 1883.

† One fluid ounce contains 437·5 grains weight of distilled water (t = 62° Fahr.) or $\frac{1}{160}$ imperial gallon.

‡ One fluid drachm equals $\frac{1}{8}$ fluid ounce.

§ One minim equals $\frac{1}{60}$ fluid drachm.

Appendix 2—*cont.*

Imperial Weights and Measures—*cont.*

Avoirdupois weights :—*cont.*
2 drams.
1 dram.
½ ,,
240 grains, commonly called 10 pennyweights.
120 grains, commonly called 5 pennyweights.
72 grains, commonly called 3 pennyweights.
48 grains, commonly called 2 pennyweights.
24 grains, commonly called 1 pennyweight.

Troy weight:
Decimal troy ounce bullion weights:
500 ounces, troy.
400 ,,
300 ,,
200 ,,
100 ,,
50 ,,
40 ,,
30 ,,
20 ,,
10 ,, or 4,800 grains.
5 ounces, to 0·001 ounce.

Apothecaries' weight:
10 ounces.
8 ,,
6 ,,
4 ,,
2 ,,
1 ounce or 480 grains.
4 drachms or half an ounce.
2 drachms.
1 drachm.
2 scruples.
1½ ,, or half a drachm.
1 scruple.
half a scruple.
6 grains.
5 ,,
4 ,,
3 ,,
2 ,,
1 grain.
half a grain.

Decimal Grain Weights:
4,000 grains.
2,000 ,,
1,000 ,,
500 ,,
300 ,,
200 ,,
100 ,,
50 grains, to 0·01 grain.

Metric Weights and Measures.

MEASURES.

Measures of length:
20 metres.
Dekametre or 10 metres.
Double metre or 2 ,,
METRE or 1,000 millimetres.
Decimetre or 0·1 metre.
Centimetre or 0·01 ,,
Millimetre or 0·001 ,,

Measures of capacity:
20 litres.
10 ,, (dekalitre).
5 ,,
2 litres.
1 LITRE.
0·5 litre.
0·2 ,,
0·1 ,, (decilitre).
0·05 ,,
0·02 ,,
0·01 ,, (centilitre).
0·005 ,,
0·002 ,,
0·001 ,, (millilitre).

Cubic measure:
1,000 cubic centimetres.
500 ,, ,,
200 ,, ,,
100 ,, ,,
50 ,, ,,
20 ,, ,,
10 ,, ,,

METRIC WEIGHTS AND MEASURES—*cont.*

Cubic measure:—*cont.*

5 cubic centimetres.
2 ,, ,,
1 cubic centimetre (1,000 cubic millimetres).

Weights:

20 kilograms.
10 ,,
5 ,,
2 ,,
1 KILOGRAM (1,000 grammes).
500 grammes.
200 ,,
100 grammes.
50 ,,
20 ,,
10 ,,
5 ,,
2 ,,
1 gramme.
5 decigrams.
2 ,,
1 decigram.
5 centigrams.
2 ,,
1 centigram.
5 milligrams.
2 ,,
1 milligram.

APPENDIX 3.

CERTIFICATE OF PRELIMINARY TEST.

To_____ (*Name and address of firm.*)

_____

I hereby certify that I have this day examined and tested on your premises a (*here state description of machine and identification mark*) marked___of weighing capacity_____up to its maximum load and found the same correct.

Dated the_____day of_____

_____

Inspector of Weights and Measures.

_____

Weights and Measures Office.

N.B.—Weighbridges and dormant platform weighing machines must be verified and stamped *in situ* in addition to any preliminary test.

COAL MINES REGULATION ACT, 1887.

50 & 51 Vict. c. 58.

15.—(1) The Weights and Measures Act, 1878, shall apply to all weights, balances, scales, steelyards, and weighing machines used at any mine for determining the wages payable to any person employed in the mine according to the weight of the mineral gotten by him, in like manner as it applies to weights, balances, scales, steelyards, and weighing machines used for trade.

Application of Weights and Measures Acts to coal mines.

(2) An inspector of weights and measures appointed under the said Act shall once at least in every six months inspect and examine in manner directed by the said Act the weights, balances, scales, steelyards, and weighing machines used or in the possession of any person for use as aforesaid at any mine within his district; and shall also make such inspection and examination at any other time in any case where he has reasonable cause to believe that there is in use at the mine any false or unjust weight, balance, scale, steelyard, or weighing machine.

Inspection every six months.

(3) The inspector shall also inspect and examine the measures and gauges in use at the mines within his district; but nothing in this section shall prevent or interfere with the use of the measures or gauges ordinarily used at the mine.

(4) An inspector may, for the purposes of this section, without any authorization from a justice of the peace, exercise at or in any mine, as respects all weights, measures, scales, balances, steelyards, and weighing

Power to enter.

50 & 51 Vict. c. 58, s. 15.

machines used or in the possession of any person for use at or in that mine, all such powers as he could exercise if authorized in writing by a justice of the peace, under sect. 48 of the Weights and Measures Act, 1878, with respect to any such weights, measures, scales, balances, steelyards, and weighing machines as therein mentioned; and all the provisions of that section, including the liability to penalties, shall apply to such inspection.

(5) The inspector of weights and measures shall not, in fulfilling the duties required of him under this section, impede or obstruct the working of the mine.

FACTORY AND WORKSHOP ACT, 1901.

1 Edw. 7, c. 22.

Inspection of weights and measures used in ascertaining wages.

117.—Every Act for the time being in force relating to weights and measures shall extend to weights, measures, scales, balances, steelyards, and weighing machines used in a factory or workshop in checking or ascertaining the wages of any person employed therein, in like manner as if they were used in the sale of goods, and as if the factory or workshop were a place where goods are kept for sale, and every such Act shall apply accordingly, and every inspector of, or other person authorized to inspect or examine, weights and measures, shall inspect, stamp, mark, search for, and examine the said weights and measures, scales, balances, steelyards, and weighing machines accordingly, and for that purpose shall have the same powers and duties as he has in relation to weights, measures, scales, balances, steelyards, and weighing machines used in the sale of goods.

Sale of Bread.*

(*England and Ireland.*)

There are two Acts in almost identical terms, 3 Geo. 4, c. cvi., which applies to the City of London and the liberties thereof and within the weekly bills of mortality and within ten miles of the Royal Exchange, and 6 & 7 Will. 4, c. 37, elsewhere in England and Wales. Such sections of the latter Act as relate to the providing of weighing instruments are here inserted. The references in brackets are to the corresponding sections of 3 Geo. 3, c. cvi. Where a section is summarized, it is inserted in brackets [ ]. Superfluous words are omitted thus . . .

3 Geo. 4, c. cvi.; 6 & 7 Will. 4, c. 37; and 1 & 2 Vict. c. 28.

Provisions as to sale of bread by weight in Ireland are given in the notes.

The object of these Acts has been thus stated by Mr. Justice *Lush* in *R.* v. *Wood* (L. R. 4 Q. B. 562):—"The object of the Legislature in passing the Act was to liberate the trade from the restrictions of the Assize Act, and leave the baker at liberty to make bread of any shape and size he pleased, and to charge his own price for it, but in order to protect the customer from imposition, it required the baker to sell by weight. He is no longer at liberty to sell at so much per loaf, he must sell at so much per pound; and the customer is to be supplied with so many pounds of bread, unless he chooses to have an article of exceptional quality, something that is not ordinary bread; and if he buys that, the baker is to be at liberty to sell it without reference to its weight."

These Acts are here given only in so far as they relate to the weighing of bread.

The sale of bread in Scottish burghs is regulated by sects. 427 and 430 of the Burgh Police Act, 1892, *post*, p. 350.

3.—(3) It shall and may be lawful for the several bakers or sellers of bread *beyond* the limits aforesaid to make and sell or offer for sale in his, her, or their shop, or to deliver to his, her, or their customer or customers bread made of such weight or size as such bakers or sellers of bread shall think fit, any law or usage to the contrary notwithstanding.

Size and weight.

In the London Act the words "*within* the limits aforesaid" are substituted for the words "*beyond*, etc."

* In the *Monthly Review*, vol. v. p. 93, will be found a paper by Mr. Allwood, dealing with cases under the Bread Acts.

3 Geo. 4, etc.

Bread to be sold by weight only.

4.—(4) All bread sold *beyond* the limits aforesaid shall be sold by the several bakers or sellers of bread respectively *beyond* the said limits by weight; and in case any baker or seller of bread *beyond* the limits aforesaid shall sell or cause to be sold bread in any other manner than by weight, then and in such case every such baker or seller of bread shall for every such offence forfeit and pay any sum not exceeding 40 shillings, which the magistrate or magistrates, justice or justices, before whom such offender or offenders shall be convicted, shall order and direct. Provided always that nothing in this Act contained shall extend or be construed to extend to prevent or hinder any such baker or seller of bread from selling bread usually sold under the denomination of French or fancy bread or rolls without previously weighing the same.

Penalty.

Except fancy bread.

For "beyond" the London Act reads "within."

A purchaser asked for "a quartern loaf," and on subsequently weighing the loaf given found it more than 2 ozs. short of 4 lbs., the recognized "quartern." The dough had been weighed, with allowance for baking, but the loaf itself was never weighed. *Held*, that the transaction was not a sale by weight, but by denomination, and that the seller was rightly convicted of selling otherwise than by weight: *Jones* v. *Huxtable*, L. R. 2 Q. B. 460; followed in the similar case of *Williams* v. *Deggan*, 16 L. T. 492.

A policeman asked for "a *quart* loaf," meaning a *quartern* loaf. A loaf was handed to him on his paying fourpence for it. On subsequent weighing the loaf was found 1 oz. 3 dwts. short of 4 lbs. *Held*, that there was evidence to justify a conviction for selling bread otherwise than by weight, as the burden of proving that the bread had been in fact weighed lies on the seller: *Milton* v. *Troke*, 20 L. T. 563.

Sale by weight.

Putting 4 lbs. of dough into the oven for each loaf, and then selling the loaves, which varied in weight from 3 lbs. 7 ozs. 3½ drams to 3 lbs. 10 drams, as "3½-lb." loaves, is a sale by denomination and not by weight: *Hill* v. *Browning*, L. R. 5 Q. B. 453.

In *R.* v. *Kennett & Saunders*, L. R. 4 Q. B. 565, it was held that when bread is asked for *by weight*, i.e. a "4-lb. loaf" or "a 2-lb. loaf," the seller is bound to sell by weight, whether he gives fancy bread or

ordinary, and to weigh it at some time or other, and not to sell it by denomination of "household bread" or "fancy bread," and that the fact that the loaves given are of less weight than that asked for, is *primâ facie* evidence that they were never weighed at all. 3 Geo. 4, etc.

Loaves were baked in a batch of three, and the batch was subsequently weighed. They were then separated, and sold separately. This was not a sale by weight only: *Welch* v. *Cutter*, 92 L. T. 239.

Although the purchaser ask for a loaf by price and not by weight it must be weighed under this section: *London C. C.* v. *Read*, 1900, 1 Q. B. 288. The weight must be actually ascertained, or ascertained to be over the quantity purported to be sold: *Bridge* v. *Passman*, 68 J. P. 129. Thus where 2 lb. was placed on the weights-pan, and the bread placed subsequently on the goods-pan failed to depress it, there was no sale by weight, this being done in response to a request by the purchaser for a half-quartern loaf: *Cox* v. *Bleines*, 1902, 1 K. B. 670.

A card was hung up in a shop stating that all bread sold would in future be sold by weight at the "following prices—Plain bread, 1½*d.* per lb.; brown bread, 2*d.* per lb." In the ordinary course of business each loaf of new bread was weighed separately to ascertain that it weighed fully 2 lb. before it was put in the shop for sale. Loaves not sold were sold next day as stale bread, and were weighed at the time of sale. A purchaser asked for a loaf of bread, and was handed a loaf and charged 3*d.* for it. It was paid for and then handed to an inspector at the shop door, who thereupon entered the shop and weighed the loaf on the scales provided there. It was 1 oz. over the 2 lbs. *Held*, that the vendor intended to sell by weight and by weight only, and that although no weight was mentioned at the time of sale, it was not proved that the sale "was otherwise than by weight," and that the magistrates had properly dismissed the information: *Blackshaw* v. *Swarthmoor Co-op. Society*, Al. 203.

Fancy bread.

In *R.* v. *Wood*, L. R. 4 Q. B. 559, it was held that bread which was usually sold as fancy bread in 1836, but which was not usually sold as fancy bread at the time of the sale in question, was not within the proviso. In the case of *The Aërated Bread Company* v. *Gregg*, L. R. 8 Q. B. 355, it was held that the justices had come to a right conclusion in finding that bread (made of the same material as ordinary loaves sold by bakers generally, and only as to the manner in which it was baked resembled what was known as "fancy bread," in 1836) was not within the proviso. Both these cases were followed in *The V. V. Bread Co.* v. *Stubbs*, Al. 121, in which it was held that bread made of a superior kind of yeast, but sold in loaves in size and shape similar to the ordinary half-quartern loaf, was not "fancy bread." Fancy bread must be made in loaves of such size and shape as to be distinct in appearance from ordinary bread. In *Mills* v. *Allwood*, Al. 129, it was held by the recorder of Wolverhampton that

3 Geo. 4, etc.

a brown bread known as "Bermaline" was not usually sold as fancy bread.

See case of *Copeland* v. *Walker*, noted to sect. 7 below.

The corresponding section in the Irish Act, 1 & 2 Vict. c. 28, is section 4. It is slightly differently worded, and after the word "weight" in line 2 of sect. 4 above, contains the words "only and not by measure."

A woman entered a shop in Derry and asked for a "threepenny loaf." She was handed one, paid for it, and took it home. It weighed 1 oz. short of two pounds. It was the custom to bake only two standard loaves in household bread, 2 lb. and 4 lb. The respondents did not weigh the bread at the time of sale unless asked to do so. They had previously signed a circular as regards sale of 2 lb. and 4 lb. loaves of full weight. The dough was cut by a machine in such quantities that it was calculated to produce loaves of full weight. *Held*, following the above cases under the English Acts, that the respondents had sold bread otherwise than by weight: *Slater* v. *Brewsters, Ltd.*, 1905, 2 I. R. 258.

The class of weighing instruments called the "money weight" scales (*ante*, p. 90) enables the seller to sell *by weight*, and the customer to see the exact price for the quantity weighed, without calculation. "Make-weight" pieces of bread are by this system unnecessary.

Use of imperial standards.

5.—(5) The several bakers or sellers of bread respectively *beyond* the said limits in the sale of bread shall use the avoirdupois weight of 16 ozs. to the pound, according to the standard in the Exchequer, and the several gradations of the same for any less quantity than a pound; and in case any such baker or seller of bread shall at any time use any other than the avoirdupois weight, and the several gradations of the same, he, she, or they shall for every such offence forfeit and pay any sum not exceeding £5, nor less than 40 shillings, as the magistrate or magistrates, justice or justices, before whom such conviction shall take place, shall from time to time order and adjudge.

The London Act substitutes "within" for "beyond."

1 & 2 Vict. c. 28, s. 5, is similar in terms, and applies to Ireland; but the maximum and minimum penalties are 40*s*. and 10*s*. respectively.

The penalty for a first offence may be reduced by sect. 4 of the Summary Jurisdiction Act, 1879.

3 Geo. 4, etc.

Seller to provide scales.

6.—(8) Every baker or seller of bread *beyond* the limits aforesaid shall cause to be fixed in some conspicuous part of his, her, or their shop, on or near the counter, a beam and scales with proper weights, or other sufficient balance, in order that all bread there sold may from time to time be weighed in the presence of the purchaser thereof except as aforesaid; and in case any such baker or seller of bread shall neglect to fix such beam and scales, or other sufficient balance, in manner aforesaid, or to provide and keep for use proper beam and scales, and proper weights or balance, or shall have or use any incorrect or false beam or scales or balance, or any false weight not being the weight it purports to be, according to the standard in the Exchequer, then and in every such case he, she, or they shall, for every such false beam and scales and balance, or false weight, forfeit and pay any sum not exceeding £5, which the magistrate or magistrates, justice or justices, before whom such offender or offenders shall be convicted, shall order and direct.

The London Act reads "within" for "beyond."

The penalty under the next section (which provides for the carrying of scales with carts "in order that all bread sold by every such baker, etc.") for at any time refusing to weigh, applies also to a refusal to weigh in the shop: *R.* v. *Kingsby* or *Kingsley*, 15 J. P. 65.

There is no penalty for neglecting to supply the scales, but only for having false weights, etc.; the only remedy for neglect is by indictment for a misdemeanour: *R.* v. *Smith*, 63 L. J. M. C. 67.

Ireland.

1 & 2 Vict. c. 28, s. 6, which applies to Ireland and corresponds with above section, is in different terms. It enacts: "That every baker or seller of bread . . . shall cause to be fixed in some conspicuous part of his, her, or their shop, on or near the counter, a beam and scales with proper weights, or other sufficient balances, in order that every person who may purchase any such bread may, if he or she shall think proper, require the same to be weighed in his or her presence; and in case any such baker or seller of bread shall neglect to fix such beam and scales or other sufficient balance in manner aforesaid, or to provide and keep for use proper beam and scales, and proper weights or balance, or shall have or use any incorrect or false

3 Geo. 4, etc.

beam or scales or balance, or any false weight not being the weight it purports to be, according to the standard in the Exchequer, or shall, when thereunto required by any person who may purchase any such bread, refuse to weigh the same in the presence of such person in such scales or balance, and with such weights as aforesaid, then and in every such case . . . " [Penalty £5.]

The difficulties illustrated in the preceding cases do not therefore arise in Ireland.

Scales in bread carts.

7.—(9) Every baker, or seller of bread *beyond* the limits aforesaid, and every journeyman, servant, or other person employed by such baker or seller of bread, who shall convey or carry out bread for sale in and from any cart or other carriage *drawn by a horse, mule, or ass,* shall be provided with and shall constantly carry in such cart or other carriage a correct beam and scales with proper weights or other sufficient balance in order that all bread sold by every such baker or seller of bread, or by his or her journeyman, servant, or other person may from time to time be weighed in the presence of the purchasers thereof except as aforesaid; and in case any such baker or seller of bread, or his or her journeyman, servant, or other person shall at any time carry out or deliver any bread without being provided with such beam and scales with proper weights, or other sufficient balance, or whose weights shall be deficient in their due weight according to the standard in the Exchequer, or shall at any time refuse to weigh any bread purchased of him, her, or them, or delivered by his, her, or their journeyman, servant, or other person in the presence of the person or persons purchasing or receiving the same, then and in every such case every such baker or seller of bread shall for every such offence forfeit and pay any sum not exceeding £5, which the magistrate or magistrates, justice or justices, before whom such offender or offenders shall be convicted, shall order and direct.

In the London Act the word "within" is substituted for "beyond," and it also contains the words printed in italics, which are not in the general Act. 3 Geo. 4, etc.

Any weighing instrument as defined by sect. 35 of the Act of 1889 (*ante*, p. 228), is a "sufficient balance" within the enactment: 4 Edw. VII. c. 28, s. 11, *ante*, p. 247.

No penalty or forfeiture is incurred for refusing to weigh in presence of purchasers bread carried in carts, etc., unless such refusal is to the purchaser's request: 52 & 53 Vict. c. 21, s. 32, *ante*, p. 227.

This amending enactment only applies to refusing to weigh when requested, and in no way affects the rest of the section or the Act: *Copeland* v. *Walker*, 65 L. T. 262.

A baker who supplied a customer at her house under a continuing order, and entered in a book the amount of bread left at the house, but delivered it in a cart not provided with scales, was held to be rightly convicted under this section (*Robinson* v. *Cliff*, 1 Ex. D. 294); and the section applies even though the bread was weighed before it was sent from the shop, where there is no sale before delivery (*Ridgway* v. *Ward*, 14 Q. B. D. 110); but the section was held not to apply where bread was weighed and *sold* in the customer's presence, and then sent home at her request with other goods, in a cart without scales (*Daniel* v. *Whitfield*, 15 Q. B. D. 408).

There is no provision, as regards Ireland, similar to that in this section.

13.—(15) [Penalty for obstructing search, etc., for adulterated bread or materials. Proviso that where a baker make complaint to the justice that any offence which such person was charged with and for which he has paid any penalty under this Act, was occasioned by or through the wilful act, neglect, or default of any servant, the justice may issue a warrant to bring such servant before him, and after hearing the complaint, may order what reasonable sum of money is to be paid by the servant by way of compensation to the master. Servant not paying the compensation awarded may be sentenced to imprisonment for a term not exceeding one month with hard labour.] Obstruction. Remedy against servant.

15.—(17) Provided always, that no person who shall follow or be concerned in the business of a miller, Disqualification of justice.

3 Geo. 4, etc.

mealman, or baker, shall be capable of acting or shall be allowed to act as a justice of the peace under this Act, or in putting into execution any of the powers in or by this Act granted; and if any miller, mealman, or baker shall presume to do so, he or they so offending in the premises shall for every such offence forfeit and pay the sum of £100 to any person or persons who will inform or sue for the same, to be recovered, together with full costs of suit, in any of His Majesty's Courts of Record at Westminster. . . .

Such action would now be brought, under the Judicature Acts, in the High Court of Justice.

Resistance.

16.—(18) In case any person or persons shall resist, or make forcible opposition against any person or persons employed in the due execution of this Act, every such person offending therein shall for every such offence forfeit any sum not exceeding £10, at the discretion of the magistrate or magistrates, justice or justices of the peace, before whom he or she shall have been convicted of such offence.

In Ireland the same provision is contained in sect. 15 of 1 & 2 Vict. c. 28, but the maximum penalty is £5 instead of £10.

Recovery of penalties.

17. [Recovery of penalties before justices. Penalties and costs to be enforced by distress. In default of sufficient distress imprisonment for a period not exceeding one month with or without hard labour.] Monies arising by such penalties, forfeitures, and fines respectively when paid or levied, if not otherwise directed to be applied by this Act, shall be from time to time paid, one moiety thereof to the informer or person suing for and recovering the same [*and the other moiety to the relief of the poor*].

A Metropolitan police magistrate in a Metropolitan Police Court to lessen the informer's share (2 & 3 Vict. c. 71, s. 34), or mitigate a penalty (*Ibid.*, s. 35). The rest of the penalty that does not go to the informer in such courts goes to the Police Fund (*Ibid.*, s. 71). This last-mentioned section also supersedes the concluding part of the enactment in italics and summarized which has been repealed in the general Act. 3 Geo. 4, etc.

25. [Appeal to Quarter Sessions.]

31.—(31) Provided also, that no person shall be convicted of any offence under this Act, unless the complaint is made within 48 hours after the offence shall have been committed, *or within such reasonable time as to the justice or justices shall seem fit,* except in cases of perjury; and that no person who shall be prosecuted to conviction for any offence done or committed against this Act shall be liable to be prosecuted for the same offence under any other law. Limitation of prosecutions.

The words printed in italics above are omitted from the London Act.

32.—(32) All penalties and forfeitures by this Act inflicted, and the application of which is not hereinbefore directed, shall when recovered or paid, go and be disposed of in manner following; (that is to say) one moiety thereof, where any [offender shall be convicted on confession or evidence] shall go and be paid to the person or persons who shall inform against or prosecute to conviction any such offender or offenders; and the other moiety thereof (or, in case there be no such person informing, then the whole thereof) shall go and be paid [to some one of the overseers or other officer to be paid over to the use of the *general rate of the county, etc.*]. Application of penalties.

In the London Act the second moiety is directed to go to the relief of the poor, but that provision is superseded in cases in the police courts by 2 & 3 Vict. c. 71, s. 71.

1 & 2 Will. 4, c. lxxvi.

Sale of Coal.

Metropolis.

The following provisions apply to places within twenty-five miles from the General Post Office, including London and its port and Westminster.

Passages in brackets [ ] are not given verbatim, but summarized.

Coal sold by weight.

43. All coal, cinders, culm, and cannel . . . shall be sold by weight and not by measure.

Unless repugnant to the context, the word "coals" in 1 & 2 Will. 4, c. LXXVI., and in 1 & 2 Vict. c. CI., includes "coals, coke, cinders, and culm:" 14 & 15 Vict. c. CXLVI., ss. 1, 50.

Frauds.

45. If any seller of, or dealer in, coals, shall knowingly sell one sort of coals for and as a sort which they really are not,

[Penalty of £10 per ton, and so in proportion for any smaller quantity; but not in respect of any number of tons exceeding 25 for the same offence.]

See note to sect. 43.

This offence now comes under the stringent provisions of the Merchandise Marks Act, 1887, 50 & 51 Vict. c. 28, which enacts that a false statement as to place of origin, is a false trade description within that Act, unless such description had, at the passing of that Act, by custom become a description of the article sold, apart from its place of origin.

Coals sold in quantity over 560 lbs. to be delivered in sacks.

48. Coals sold from any lighter, barge, or other craft, or from any wharf, warehouse, or other place . . . in any quantity exceeding 560 lbs., except coals carried and delivered in bulk as hereinafter mentioned, shall be carried and delivered to the respective purchasers thereof in sacks, each sack containing either 112 lbs. or 224 lbs. net; provided always that coals delivered by gang labour may be conveyed in sacks containing any weight . . .

See note to sect. 43, above.

49. [Provided always that any coals sold from any ship, lighter, wharf, etc., in any quantity exceeding 560 lbs., may be . . . delivered, if the purchasers think fit, in bulk in carts or other carriages, lighter, barge, or craft; provided that the weight of such cart as well as the coals shall be previously ascertained by a weighing machine fixed on the wharf, and by stating the same on the ticket.]

1 & 2 Will. 4, c. lxxvi.

May be delivered in bulk if over 560 lbs., and if previously weighed.

Penalty for carrying or delivering without having a weighing machine fixed, or for not weighing cart and coals on such machine, not exceeding £50.

See note to sect. 43, above.

50. [The carman or driver, if over 560 lbs. be carried in bulk for delivery to the purchaser . . . shall (if required by the purchaser or any person acting on his behalf), weigh the waggon or carriage, with the coals therein, at any public weighing machine for carts or other carriages which may be situate on the road between the place from which the coals shall be brought and the place of delivery, or at any point within the distance of 100 yards from any part of such road, and shall weigh in like manner the cart, waggon, or other carriage without the coals.]

Weighing by carmen.

[Penalty not exceeding £10: the driver shall not be obliged to weigh the cart without the coals until after he has delivered them, or to go back to a public weighing machine after he has passed one.]

See note to sect. 43, above.

51. [Where coals are delivered in bulk . . . if a less quantity be delivered than is expressed on the ticket,

Short delivery in bulk.

Penalty not exceeding £10: if deficiency exceeds 224 lbs., penalty not exceeding £50.]

1 & 2 Will. 4, c. lxxvi.

52. [If any carman or driver of any cart, waggon, or other carriage laden with coals for sale, or to be delivered to the purchaser . . . shall not have placed in, on, or under such cart, waggon, or carriage, a perfect weighing machine marked at Guildhall, London, by the proper officer there,

Penalty not exceeding £20: coals carried in bulk or in purchaser's cart are exempt.]

1 & 2 Vict. c. cl., s. 5.

No weighing machine shall be deemed a perfect weighing machine within the meaning of 1 & 2 Will. 4, c. LXXVI., unless proper weights are carried therewith, and also that any other just balance, with an even beam and legal weights, shall be deemed a perfect weighing machine although not marked at the Guildhall. If any carman required to carry a weighing machine as prescribed carry any machine or weights which are imperfect or improper for the purpose of denoting the weights of coals, . . . [Penalty on carrier not exceeding £5; on seller or dealer not exceeding £10.]

See note to sect. 43, above.

Prescribed form of machine.

53. [Prescribed form of weighing machine may be altered by notice to the Lord Mayor in the *Gazette*.]

Carrier to weigh at request of purchaser.

54. The carman or driver of any cart, waggon, or other carriage in which coals shall be carried in sacks for delivery to the purchaser thereof, from any ship, lighter, barge, or other craft, or from any wharf, warehouse, or other place . . . shall weigh, if required so to do, any one or more of the sacks contained in any such cart, waggon, or any other carriage, which may be chosen by the purchaser of the said coals, or his servant, or other person acting on the behalf of such purchaser, with the coals therein, and also afterwards to weigh in like manner such sack without any coals therein.

See note to sect. 43, above.

Unless this section is strictly complied with, the penalties cannot be recovered, and it has been *held*, that weighing each sack of coals in one scale against proper weights, and an empty sack in the other scale,

is not a legal weighing within this section: *Meredith* v. *Holman*, 16 M. & W. 798; *Smith* v. *Wood*, 24 Q. B. D. 23.

1 & 2 Will. 4, c. lxxvi.

Refusing, etc., to weigh.

55. If any carman or driver of any cart, or waggon, or other carriage in which coals shall be in sacks for delivery to the purchaser thereof from any ship, vessel, lighter, barge, or other craft, or from any wharf, warehouse, or other place . . . shall neglect or refuse to weigh by the said machine any such sack of coals in manner hereinbefore directed, when thereunto required by the purchaser of such coals, or by his servant, or other person acting by, for, or under the authority of such purchaser, or if any such carman or driver shall drive away or permit or suffer the said cart, waggon, or other carriage to be driven away, without weighing in manner herein directed the said sack or sacks of coals, or shall hinder, obstruct, or otherwise prevent the purchaser of such coals or his servant . . . [repealed 1 & 2 Vict. c. ci., s. 67] . . . from examining the said machine, or weighing all or any of the sacks of coal in such his cart, waggon, or other carriage, [penalty in every such case on every such carman or driver so offending not exceeding £20 nor less than £5.]

See note to sect. 43, above.

Weighing on finding deficiency.

56. [If coals in sacks are found deficient in weight the purchaser or any person acting by, for, or under his authority may require the carman or driver to weigh or re-weigh any such coals in the presence of some constable or credible person, and the carman or driver must remain at or before the purchaser's house with such cart, until the coals are weighed; if the carman or driver drive away or permit the cart to be driven away before the coals are weighed,

Penalty, not exceeding £20.]

See note to sect. 43, above.

1 & 2 Will. 4, c. lxxvi.

Procedure on weighing.

57. [Purchaser to procure the attendance of a constable or other indifferent and credible person, if desirous of having the coals weighed or re-weighed, all the sacks, both with and without the coals therein, shall accordingly be weighed: if the purchaser or his agent do not attend, then the carman shall weigh. Penalty for refusing or neglecting to weigh not exceeding £10. The constable or person present may weigh: if the sacks do not contain 112 or 224 lbs. net, penalty on seller for short weight, not exceeding £5 for every sack of coals.]

See note to sect. 43, above.

Only one offence is committed, although a number of sacks may be deficient in weight, and the penalty is therefore recoverable by action, and not before justices, if the amount forfeited exceeds £25: *Collins* v. *Hopwood*, 15 M. & W. 459. Unless the method of weighing prescribed by this section be adopted, no action for the recovery of the penalty will lie: *Smith* v. *Wood*, 24 Q. B. D. 23.

Weighing of less than 5 cwt. of coals.

58. All coals sold in any quantity less than 560 lbs. shall be weighed previous to being delivered to the purchaser, and also if required by and in the presence of such purchaser or his agent or servant:—

[Penalty on seller or dealer, £5.]

See note to sect. 43, above.

Machines to be provided.

59. A proper machine or scales and weights shall be kept at every . . . police station, or at any places appointed by any two justices . . . [the overseers to provide and repair the same. Penalty for neglect after seven days' notice, not exceeding £10.]

Recovery of penalties.

77. [All fines, penalties, and forfeitures by this Act or by virtue of the powers and authorities thereof, imposed, the manner of levying and recovering whereof is not hereby and otherwise directed], not exceeding £25, shall be sued for within one [now four] calendar months,

after the offence is committed; all such fines [etc., shall be recovered before a justice of the peace.] 1 & 2 Will. 4, c. lxxvi.

By 8 & 9 Vict. c. CI. a justice on complaint being made may summon the offender and decide the case without an information.

79, 81, 85, and 88. [Justices may give part of penalties to informers. Penalties incurred by carmen may be recovered from their employers. If over £25, to be sued for only by action within three calendar months (14 & 15 Vict. c. CXLVI.). Plaintiff not to recover after tender of amends.] Miscellaneous.

Amending Act. 1 & 2 Vict. c. ci.

See note to sect. 43 of 1 & 2 Will. 4, c. LXXVI., *ante*, p. 340.

3. With any quantity of coal exceeding 560 lbs. delivered by any cart, waggon, or other carriage, the seller shall deliver, or cause to be delivered to the purchaser . . . or his agent or servant, immediately on the arrival of such cart in which such coals shall be sent, and before any of such coals shall be unloaded, a paper or ticket, according to the form in Schedule A. Tickets to purchaser.

Penalty on seller . . . not exceeding £20 and also on carman who refuses or neglects so to deliver the ticket: coals delivered to a seller or dealer, or to a purchaser in the coal market, may be delivered without paper or ticket.

This section was held applicable where the quantity to be delivered exceeds 560 lbs., although a less amount was carried at a time: *Cundell* v. *Dawson*, 4 C. B. 376.

This section repeals so much of 1 & 2 Will. 4, c. LXXVI. s. 47, as relates to the delivery of a seller's ticket, but gives no power to any individual to sue for the penalty where no seller's ticket is delivered: *Meredith* v. *Holman*, 16 M. & W. 798.

4. [A paper or ticket is to be sent with coals delivered from lighters. Coals delivered from lighters.

Penalty not exceeding £20: same proviso as in last section.]

THE BURGH POLICE (SCOTLAND) ACT, 1892.

55 & 56 Vict. c. 55.

The sections in brackets, thus [ ], are summarized.

Markets.

277. [Powers of Commissioners with regard to markets; providing places for weighing carts. Incorporation of Markets and Fairs Clauses Act, 1847, and Markets and Fairs (Weighing of Cattle) Act, 1887, with this Act.]

Erection of weighing machines.

416. [Power to Commissioners to erect, or grant power to others to erect, weighing machines and to appoint attendants for them. Power to sanction and regulate the management of weighing machines already existing and not otherwise regulated by Act of Parliament.]

Duties of keepers.

417. It shall be the duty of the keeper of every public weighing machine during such hours as shall be fixed by the Commissioners to weigh every cart or carriage presented to him for that purpose, and to enter in a book, and also to give to the driver a certificate of the contents or load of such cart or carriage, its gross weight, its number, or such other particulars as shall identify it, the tare weight, if marked thereon, and the exact time of weighing. [Power to make bye-laws.]

Savings.

418. [Rights or powers of harbour Commissioners or trustees not affected.]

Movable machines.

419. It shall be lawful for the Commissioners to provide, furnish, and maintain such number of portable or movable machines for weighing coals as they may deem necessary, to be kept at convenient places within the burgh in order that the inhabitants may have access to them for the purpose of re-weighing their coals at their own expense if they shall be so inclined, and to employ

proper persons to attend such machines, and to establish the rates to be payable for such weighing; and it shall be lawful for the chief constable or any other officer acting under this Act to cause coals offered for sale or for delivery to be re-weighed, and to require the driver to produce the ticket thereof, as a check on the conduct of drivers and others, such re-weighing being always done free of expense.

55 & 56 Vict. c. 55.

420. For the purpose of ascertaining the weight of coals sold in quantities of less than half a ton within any yard or place where they may be kept, or from any cart or carriage on which they may be carried by dealers for sale, such dealers shall be obliged to keep scales and weights or steelyards of the legal standard within such yard or other place, and also attached to the cart or carriage used by them for the sale of such coals, whereby the coals so sold by retail may be weighed at the time of the sale or delivery, and such dealers shall be obliged to weigh the same, upon being required to do so either by the person purchasing the same or by any officer of police; and any such dealer failing to have and keep such scales and weights or steelyards, or refusing to weigh the coals as aforesaid, shall be liable to a penalty not exceeding 40*s.*, and £5 for any subsequent offence.

Retailers of coal to keep scales, etc., for weighing on delivery.

421. Any person who shall sell any quantity of coals equal to or exceeding half a ton weight shall be bound to deliver to the carter, or other person in charge of the said coals, to be given to the purchaser, an account or memorandum specifying the true tare of the cart or carriage conveying the said coals, and the true weight and price of the coals, and the exact time the cart or carriage has left the premises of the seller, under a penalty of 20*s.* for each offence in any one of such particulars.

Sale of coal half a ton or more.

55 & 56 Vict. c. 55.

Carter to deliver memorandum.

422. The carter or person in charge of the said coals shall be bound to exhibit such account or memorandum to any police constable who may demand the same, and immediately on his arrival at the places of delivery shall deliver the same to the purchaser or inmate or other person in charge of the house or place of delivery, under a penalty of 20*s.* for each offence in either of the said particulars.

Penalty on driver refusing to weigh.

423. If any driver or other person having the charge of any cart or carriage shall not, upon being so required as aforesaid, take the same to any such public weighing machine, or shall refuse to assist in the weighing of the same in such manner as the drivers of carts or carriages are used and accustomed to do, such driver or other person shall for each offence be liable to a penalty not exceeding 40*s.*

Small quantities of coal sold from carts to be labelled.

424. Every person who sells or delivers coals in quantities not exceeding 2 cwt. in weight from any cart or carriage shall keep the specific quantities of coals to be sold by him made up in bags or boxes labelled in such a manner as to indicate the weight which such bag or box contains, and any such person failing to comply with this provision shall be liable to a penalty not exceeding 40*s.*

Fraudulent weighing.

425. If the keeper of any weighing machine used within the burgh for the purpose of ascertaining the weight of coals, or the seller of any coals which shall be weighed at such weighing machine, or any of their respective servants, shall wilfully on application refuse duly to weigh or re-weigh any cart or carriage, with or without loading, or shall designedly do or omit to do anything with intent that the true weight or measurement of any coals weighed thereat shall not be ascertained, or if the owner or driver or other person having the charge of any cart or carriage shall place or knowingly have any

article, matter, or thing in or about such cart or carriage, other than the proper load therein, or shall alter the tare or weight, or the ticket denoting the weight, of any cart or carriage, or the loading thereof, or shall make, use, or be privy to the making or using, any false or fraudulent ticket respecting the weight of any such cart or carriage or loading, or if by re-weighing or otherwise it shall be discovered that any coals have been abstracted by such owner, driver, person in charge, keeper, or servant from such cart or carriage, after it shall have passed the steel-yard or weighing machine where it was originally weighed, or if the owner or driver or person in charge of any cart or carriage, or the keeper of any machine as aforesaid, or his servants shall make or give or use, or be privy to the making or giving or using, any false or fraudulent contrivance touching the weight of any cart or carriage, or the load therein, or shall knowingly assist in or connive at any fraud in or concerning the weight of any cart or carriage, or of the load therein, or if any other person shall knowingly aid or assist in the committing of any fraud respecting the weight of any cart or carriage, or the load therein, weighed, or stated or represented to be weighed, at any such machine as aforesaid, then and in every such case every person so offending shall for every offence be liable to a penalty not exceeding £5, or to be imprisoned for any period not exceeding 60 days without the option of a fine.

55 & 56 Vict. c. 55.

426. In order to prevent fraud in the weight of grain, hay, and straw, or other commodities usually weighed in carts or carriages, it shall be lawful for the Commissioners to make regulations for ascertaining the weight or quantity of grain, hay, or straw, or other commodities brought within the burgh, upon parties voluntarily resorting to the said weighing machines for the purpose, and for the

Prevention of fraud in weighing hay, straw etc.

55 & 56 Vict. c. 55.

magistrate to punish persons disobeying such regulations, by seizing, forfeiting, and selling such grain, hay, and straw, or other commodities so brought in contravention of such regulations, or by imposing on the offender a penalty to the extent and in the manner before described in respect of coals which have not been duly weighed, and also to fine any person driving carts or carriages from which grain, hay, or straw or other commodities shall have been fraudulently taken or embezzled, and any person accessory to such fraudulent taking or embezzlement, in any penalty not exceeding £5, or to sentence him to imprisonment for any period not exceeding 60 days, without the option of a fine.

Frauds in weight of bread.

427. All bakers and dealers in bread shall, on all bread made or exposed by them for sale (except fancy bread or rolls), impress thereon in large and distinct figures the imperial weight of such bread; and any person who shall expose or offer for sale or sell any bread not so impressed shall be liable in a penalty not exceeding 40*s.* for each offence; and any person who shall sell, or offer or expose for sale, any bread which shall be deficient or under the weight so impressed, shall be liable to a penalty not exceeding 40*s.* for each offence.

Power of entry for chief constable or inspector.

430. The chief constable, or any other constable specially appointed to perform the duty by the chief constable, or any inspector of weights and measures in the burgh, may, at all reasonable hours, enter any building or part of a building, or other place within the burgh in which any article is sold, or is made up, or kept or exposed for sale by weight or measure, or in which articles are sold or are set apart, or kept or exposed for sale in numbers, or in which any article is weighed or measured, or any articles are numbered with a view to their being bought or sold, or he may stop any cart

55 & 56 Vict. c. 55.

Power to have parcels weighed.

or carriage, or any person carrying or in charge of any basket from which such articles are sold or kept or exposed for sale, on the street, public or private, and require such article or articles to be weighed, measured, or numbered in his presence; and if the weight, measure, or number thereof ascertained does not correspond with the weight, measure, or number thereof which has been represented by the person who has sold or made up, or kept or exposed the same for sale, or who weighed, measured, or numbered the same with a view to purchase or sale, such chief constable or other constable or inspector may seize, impound, and convey such article or articles to the police office, or to an office provided for the purpose by the Commissioners, and the magistrate may sentence the person who has sold or made up, or kept or exposed the same for sale, and who has incorrectly weighed, measured, or numbered the same with a view to purchase or sale, to a penalty not exceeding £5, and declare such article or articles in so far as belonging to such person to be forfeited, unless such person shall prove to his satisfaction that the deficiency in weight, measure, or number has arisen without any fraudulent intent.

A shopman sold and kept for sale packets of tea. One of these—a "quarter-pound packet"—contained only 3 ozs. 12½ drams of tea, the remainder of the 4 ozs. being the weight of the paper, string, etc. The inspector asked for "a quarter-pound packet of tea." *Held*, by the Justiciary Appeal Court, that the person supplying the packet was not guilty of any fraudulent misrepresentation, as the gross weight of the packet was actually a quarter-pound: *Bridger* v. *Neilson*, 2 M. R. 377.

Offences under Weights and Measures Acts.

431. All offences committed within the burgh under the Weights and Measures Acts, 1887 and 1889 . . . may be tried by the magistrate as police offences under complaint by the burgh prosecutor; and the penalties

55 & 56 Vict. c. 55.

may be recovered and applied in the same way as penalties for police offences under this Act; and the magistrates shall be the local authority, and the word "burgh" in the Weights and Measures Acts shall include any burgh under this Act.

Excise.

THE INLAND REVENUE ACT, 1880.

43 & 44 Vict. c. 20.

Brewers to provide weighing appliances.

28.—(1) Every brewer for sale must provide and maintain sufficient and just scales and weights and other necessary and reasonable appliances to enable the officers to take account of, or check by weight, gauge, or measure all materials and liquids used or produced in brewing.

* * * *

(4) For every contravention of this section the brewer shall incur a fine of £100.

This is an excise penalty.

THE SPIRIT ACT, 1880.

43 & 44 Vict. c. 24.

Weights and measures to be provided.

135.—(1) Every excise trader must provide sufficient and just scales and weights, and a set of standard measures for the purpose of weighing, measuring, and taking an account of the spirits, goods, and commodities in his warehouse, stock, or possession, and of any casks or vessels used for the purpose of containing any such spirits, goods, or commodities.

(2) The weights and measures must be of the prescribed denominations. 43 & 44 Vict. c. 24.

(3) The excise trader must maintain and keep the scales, weights, and measures in such proper and convenient place in his distillery, warehouse, or other premises as the proper officer approves, and so that the same shall be at all times ready for the use of officers. Their denominations. Their maintenance.

(4) The excise trader must permit any officer to use the scales, weights, and measures for the purpose aforesaid, and must, with his servants and workmen, whenever required by any officer, weigh or measure, and assist him in weighing or measuring, as he requires, and in taking account of any such spirits, goods, or commodities as aforesaid. Trader to weigh when required.

(5) For any refusal or neglect on the part of an excise trader to comply with any of the foregoing provisions of this section, he shall incur a fine of £100. Penalty.

(6) If any excise trader provides or uses or permits to be used any false, unjust, or insufficient scales or weight or measure, or practises any device or contrivance by which any officer may be prevented from or hindered or deceived in taking the just and true quantity, weight, or measure of any spirits, goods, or commodities, or of any casks or vessels, he shall incur a fine of £200, and any such scales, weights, and measures shall be forfeited. Frauds.

THE REVENUE ACT, 1889.

52 & 53 Vict. c. 42.

29. If any person exercising or carrying on a trade or business under or subject to any law of excise and required to keep scales or weights or measures,— Defrauding the revenue.

52 & 53 Vict. c. 42.

(*a*) in the weighing of his stock or any goods, uses or suffers to be used any false, unjust, or insufficient scales, or weight, or measure with intent to defraud Her Majesty of any duty of excise; or

(*b*) before or after the weighing of his stock or any goods puts or suffers to be put any other substance thereto, whereby any officer of inland revenue may be hindered or prevented from taking a just and true account;

he shall for every such offence incur a fine of £100, and the false, unjust, or insufficient scales and weights and measures shall be forfeited.

This penalty is an excise one.

THE HOP TRADE ACT, 1800.

39 & 40 Geo. 3, c. 81.

Weight of bags.

3. No owner, planter, or grower of hops shall bag any hops in any bag, the weight of which bag shall be greater in proportion to the gross weight of such bag and the hops contained therein than 10 lbs. for every 112 lbs. of the said gross weight of such bag and the hops contained therein; and if any owner, planter, or grower of hops shall bag any hops in any bag the weight of which bag shall be greater in proportion to the gross weight of such bag and the hops contained therein than 10 lbs. for every 112 lbs. of the gross weight of such bag and the hops contained therein, then and in every such case every such owner, planter, or grower so offending shall for each and every such offence forfeit the sum of £20.

THE HOP (PREVENTION OF FRAUDS) ACT, 1866.

29 & 30 Vict. c. 37.

Construction of terms.

1. In the construction of this Act the word "person" shall include any person, whether a subject of Her Majesty or not, and any body corporate or body of the like nature; the words "trade mark" or "symbol" shall include any arms or coat of arms of any county, city, borough, town, or district, or any name, signature, word, letter, device, emblem, figure, sign, seal, stamp, or other work of any other description, lawfully used by any person to denote that the hops in any bag or pocket were grown or produced by such person in any particular parish, county, or place, or to denote the said hops to be of a particular quality or description; the words "bag" or "pocket" shall include any package used for containing hops, or in which hops are packed and sent from the grower or producer to any factor, merchant, or brewer, or other person, either before or after a sale thereof.

Growers, etc., to mark each bag or pocket with year when hops were actually grown, the true progressive number.

2. Every owner, planter, or grower of hops shall, within one month after the said hops shall have been packed in any bag or pocket, mark or cause to be marked with durable ink or paint on the outside of each and every bag containing hops, in plain and legible figures of four inches in length at the least, and half an inch in breadth, and on the outside of each and every pocket containing hops, in plain and legible figures of three inches in length at the least, and half an inch in breadth, in addition to his name, and in addition to the name of the parish and of the county in which the hops put into any such bag or pocket shall be grown, as required by the recited Acts, the year in which such hops were actually grown, the true progressive number of each and

and gross weight thereof.

29 & 30 Vict. c. 37.

every such bag or pocket according to the numbers of the bags or pockets of hops grown and weighed by such owner, planter, or grower of hops during the then current year, and the true gross weight, in hundredweights, quarters, and pounds, of each and every such bag or pocket.

Growers, etc., not marking bags or pockets as directed by the said recited Acts and this Act subject to a penalty.

3. If any owner, planter, or grower of hops, or any other person, shall not mark or cause to be marked on such bag or pocket, in manner directed by the said recited Acts, and by the last preceding section of this Act, the several matters and things required and prescribed, every such owner, planter, grower, or other person so offending shall for every such offence forfeit and pay the sum of £20 for every such bag or pocket.

Growers, etc., marking false description, symbol, or trade mark, subject to penalty.

4. If any owner, planter, or grower of hops, or any person to whom any hops shall have been consigned for sale or otherwise, or any other person, shall mark or cause to be marked on any bag or pocket, either before or at any time after any hops shall have been packed therein, the name of any person, parish, or county other than the name of the planter or grower of such hops, and the parish and county in which the said hops shall have been actually grown, or if such owner, planter, grower, consignee, or other person shall at any time mark or cause to be marked on any such bag or pocket containing hops the symbol appertaining to any county or place, or any imitation thereof, other than that in which the said hops shall have been actually grown, or any year other than that in which the said hops shall have been actually grown, or any weight other than the true gross weight of every such bag or pocket of hops, or any trade mark not being the trade mark of the owner, planter, or grower of the hops therein contained, and by him usually used to denote the real owner, planter,

Weight.

or grower of, and the parish, county, or place in which such hops were actually grown, every such owner, planter, grower, consignee, or other person so offending shall for every such offence forfeit and pay the sum of £20 for every such bag or pocket. 29 & 30 Vict. c. 37.

5. [Penalty for mixing hops of different values.]

This provision has no reference to weights or measures.

6. Every person who shall sell or expose for sale, or cause or procure to be sold or exposed for sale, any hops contained in any bag or pocket, not having marked thereon in manner before directed the several matters and things by the said recited Acts and by this Act prescribed, or which shall, at the time of the said sale or exposure for sale, have marked thereon the name of any other person, parish, or county than is directed and prescribed as aforesaid, or any symbol or trade mark appertaining to any county or place other than that in which the said hops shall have been actually grown, or any imitation thereof, and not being the trade mark of the owner, planter, or grower of the hops therein contained, and by him usually used to denote the real owner, planter, or grower of, and the county or place in which such hops were actually grown, or any year other than that in which the said hops shall have been actually grown, or any weight other than the true gross weight of any such bag or pocket of hops, shall for every such offence forfeit and pay a sum of money equal to the then market value of the bag or bags, pocket or pockets of hops so sold or exposed for sale, and a further sum of money not exceeding ten pounds and not less than five pounds: Provided always, that no person shall be liable to the aforesaid forfeitures or penalties, or any of them, in respect of any false description, trade mark or symbol,

Penalties on persons selling or exposing for sale hops in bags or pockets not marked or improperly marked.

Weight.

Proviso in favour of persons selling, etc.,

29 & 30 Vict. c. 37.

bonâ fide under belief that bags or pockets were duly marked.

or imitation thereof, marked on any bag or pocket, who shall *bonâ fide* sell or expose for sale any hops as in this section aforesaid, who shall *bonâ fide* believe, and having good reason for believing (proof whereof shall be upon such person), that the description, trade marks, and symbols, or imitations thereof, at the time of such sale or exposure for sale, marked on the bag or bags, pocket or pockets, so sold or exposed for sale were genuine and in accordance with the provisions of this and the said recited Acts.

7. [Penalty on re-bagging foreign hops in British bags.]

Penalty on persons wilfully altering marks.

8. Every person who shall wilfully deface or obliterate, add to or alter, any or either of the matters or things directed to be marked by this Act, and marked on any bag or pocket containing hops, or who shall wilfully deface, obliterate, add to, or alter any trade mark or symbol marked on any bag or pocket containing hops, or who shall cause or procure any of the aforesaid matters or things, or any such trade mark or symbol as aforesaid, to be defaced, obliterated, added to, or altered, or who shall connive at any such matter or thing, trade mark or symbol, being so defaced, obliterated, added to, or altered, with intent to represent, or to cause it to be believed, or as shall be calculated or likely to cause it to be believed, that any hops contained in any bag or pocket were grown by any person or in any county or place other than the real person, county, or place by and in which the same were grown, shall for every such defacement, obliteration, addition, or alteration forfeit and pay the sum of £20 for and in respect of each bag or pocket whereon any such defacement, obliteration, alteration, or addition shall be made.

29 & 30 Vict. c. 37.

Vendors selling hops falsely marked to give information as to persons from whom he purchased or obtained the hops.

9. Where any person who shall have sold hops contained in any bag or pocket marked with any name, trade marks, symbol, or other description, contrary to this and the said recited Acts, or not marked according to the provisions of this Act and the said recited Acts, such person shall be bound, upon demand in writing delivered to him or left for him at his last known dwelling house, counting-house, office of business, or place of abode, by or on behalf of the person to whom the said hops shall have been sold, or of any other person who may have afterwards purchased the same, to give the person requiring the same, or his attorney or agent, within 48 hours after such demand, full information in writing of the name and address of the person from whom he shall have purchased or obtained the said hops, and of the time when he purchased or obtained the same; and it shall be lawful for any Justice of the Peace, upon information upon oath of such demand and refusal, to summon before him the party refusing, and, on being satisfied that such demand ought to be complied with, to order such information to be given within a certain time to be appointed by him; and any such party who shall refuse or neglect to comply with such order shall for every such offence forfeit and pay the sum of £5, and such refusal or neglect shall be deemed conclusive evidence as against the person so refusing that he sold the said hops with full knowledge that the said name, trade mark, symbol, or other description was contrary to the said recited Acts and this Act.

Power of justice to order search for bags or pockets improperly marked.

10. If it shall be made appear to any Justice of the Peace, upon information upon oath, that hops contained in any bag or pocket, or any bag or bags, pocket or pockets, are in the care or custody of any person, which bag or bags, pocket or pockets, there is good reason to

29 & 30 Vict. c. 37.

believe, is or are not marked as required by, or has or have thereon any mark contrary to this Act and the said recited Acts, it shall be lawful for such justice to issue his warrant to any constable or constables empowering or requiring him or them to enter upon any place or places where such hops, bag or bags, pocket or pockets, may be, and to take with him or them all necessary persons, and there to search for the said hops, bag or bags, pocket or pockets, and if he or they shall find there any hops in any bag or pocket, or any bag or bags, pocket or pockets, which he shall *bonâ fide* believe to be marked contrary to, or not to be marked as by the said Acts and this Act required, to seize the said hops, bag or bags, and pocket or pockets, and to detain the same for a space of time not exceeding one month, or such further time as any Justice of the Peace may order.

Description, trade mark, or symbol may be described generally.

11. In every proceeding and document whatsoever in which any description, trade mark, or symbol, or imitation thereof, marked on any bag or pocket, or any part or parts thereof, shall be intended to be mentioned, it shall not be necessary to set forth any copy or facsimile thereof, and it shall be sufficient to describe the same generally as being a description, trade mark, or symbol, in imitation thereof, contrary to the said recited Acts and this Act.

Conviction not to affect any right or civil remedy.

12. No proceeding under this Act or the recited Acts shall take away, diminish, or prejudicially affect any civil remedy which the person aggrieved may be entitled to at law or in equity or otherwise, or exempt or excuse any person from answering or making discovery upon examination as a witness, or upon interrogatories or otherwise, in any suit or other civil proceeding: Provided always, that no evidence, statement, or discovery which any person shall be compelled to give or make shall be admissible in

evidence against such person in support of any proceeding under this Act or the said recited Acts. 29 & 30 Vict. c. 37.

13. Where any person shall have committed any offence under this Act or the said recited Acts, whereby he shall have forfeited or become liable to pay any sum of money, every such penalty or sum of money may be recovered in manner provided by the 15th section of "The Merchandise Marks Act, 1862." Recovery of penalties.

The section here referred to provided for the recovery of penalties by action in a Court of Record, or by summary proceedings before justices. The Merchandise Marks Act of 1862 was repealed by sect. 23 of the Act of 1887, *post*, p. 388, which substitutes the corresponding provisions of that Act. See sect. 2, sub-section (6) thereof, *post*, p. 381.

14. [*Repealed by Statute Law Revision Act*, 1893.]

15. In every case in which judgment shall be obtained in any action for the amount of any penalty or sum of money forfeited as aforesaid, the amount of such penalty or sum of money in respect of which such judgment was so recovered as aforesaid shall be paid by the defendant to the sheriff or officer entitled to levy, demand, or receive the same, who shall account for one moiety thereof in like manner as other monies payable to Her Majesty, and shall pay the other moiety to the plaintiff; and, if it be not paid, the said penalty or sum of money may be recovered, or the amount thereof levied, or the payment thereof enforced by execution or other proper proceeding as money due to Her Majesty; and any plaintiff suing on behalf of Her Majesty upon obtaining judgment shall be entitled to recover and have execution for all the costs of suit, which shall include a full indemnity for all costs and charges which he shall or may have expended or incurred in, about, or for the purposes of the action, unless the Court or a judge thereof shall direct that costs of the ordinary amount only shall be allowed. How penalties recovered by action are to be disposed of. Plaintiff entitled to costs.

29 & 30 Vict. c. 37.

How penalties recovered by summary proceedings disposed of.

16. One moiety of any penalty or sum of money recovered by summary proceeding as aforesaid shall be deemed money payable to Her Majesty, and the other moiety shall be paid by the justices to the complainant.

Limitation of action.

17. No person shall commence any action or proceeding for the recovery of any penalty after the expiration of 3 years next after the committing of the offence, or should discovery thereof not be made within the said 3 years, then no person shall commence any action or proceeding for the recovery of any penalties after the expiration of one year next after the said discovery of the offence.

18. [Vendor to be deemed to contract that description, etc., is genuine.]

Does not apply to weight or measure.

Party aggrieved may recover damages.

19. In every case in which any person shall do or cause to be done any act contrary to this or the said recited Acts, every person aggrieved by any such wrongful act shall be entitled to maintain an action or suit for damages in respect thereof against the person who shall be guilty of having done such act, or causing or procuring the same to be done.

Provisions of 25 & 26 Vict. c. 88, incorporated.

20. The provisions of the 23rd and 24th sections of "The Merchandise Marks Act, 1862," shall be considered as incorporated in this Act as fully as if the same were here set forth and re-enacted at length.

The sections here mentioned are now replaced by sect. 14 of the Merchandise Marks Act, 1887, by sect. 23 of that Act. See *post*, p. 387.

Sale of Intoxicating Liquors.

Measures used for the sale of intoxicating liquors are used for trade and therefore come under the powers of the inspector. But when he takes proceedings under the Acts relating to the sale of intoxicating liquors below the inspector acts as a common informer.

THE LICENSING ACT, 1872.

35 & 36 Vict. c. 94.

Retail sale by imperial measures.

8. Every person shall sell all intoxicating liquor which is sold by retail and not in cask or bottle, and is not sold in a quantity less than half a pint, in measures marked according to the imperial standards. Every person who acts, or suffers any person under his control or in his employment to act, in contravention of this section shall be liable to a penalty not exceeding, for the first offence £10, and not exceeding for any subsequent offence £20, and shall also be liable to forfeit the illegal measure in which the liquor was sold.

A publican sold beer in an unstamped measure known locally as a "blue." On inspection it was found to contain more than half a pint. A notice was stuck up in the bar stating that a "blue of beer" was not represented as containing any amount by imperial measure. *Held*, that the justices were right in convicting the publican of selling more than half a pint in an unstamped measure: *Payne* v. *Thomas*, 54 J. P. 708.

The beer must not only be drawn into the marked measure, but handed in it to the customer. Beer drawn in a marked measure and transferred to a jug not in the presence of the customer and before it is handed to him, is not "sold" in a marked measure: *Addy* v. *Blake*, 19 Q. B. D. 478.

A customer asked for a pint of beer, handing a jug to the publican. The latter in the presence and sight of the customer twice filled with beer a half-pint measure properly stamped and poured the beer into the jug. He then poured an additional quantity of beer (amounting to a gill) into the jug. *Held*, that no offence had been committed. In

35 & 36 Vict. c. 94.

giving judgment the Lord Chief Justice said: "I have nothing to do with the question whether the man who sells with a 'long pull' is or is not guilty of an offence, but I know of no statute which makes it so. If the case had been that there was no measure at all and that the publican had given the customer a 'long pull' to ensure his getting a full pint, different considerations would have arisen. But if the publican does not break the statute by the use of two half-pint measures he does not any the more break it because he adds something beyond. All that was sold and paid for was the pint." *Pennington* v. *Pincock*, 24 T. L. R. 509.

It appears that if a customer asks for a "large glass" or a "long drink," and is supplied with a quantity exceeding half a pint, it must be handed to him in a stamped measure, although the transaction is not a sale by measure, and the amount supplied need not be an exact quantity of legal denomination.

It must be noted that the above section does not specify the measures which may be used, but enacts that the measures be *stamped*.

The litre and half-litre measures may now be stamped, and are used in many restaurants in London; the *litre* is a little more than *a pint and three-quarters*. It has not been decided whether intoxicating liquor can be sold in such measures.

THE LICENSING (SCOTLAND) ACT, 1903.

3 Edw. 7, c. 25.

Sale to be by standard measure.

52. All exciseable liquor sold by retail by a holder of a certificate shall, unless sold in cask or bottle, or in quantities less than a pint, be sold in measures marked according to the imperial standards. Every person who acts or suffers any person under his control or in his employment to act in contravention of this section shall be liable to a penalty not exceeding for the first offence £10, and not exceeding for any subsequent offence £20, and shall also be liable to forfeit the illegal measure in which the liquor was sold.

THE REFRESHMENT HOUSE (IRELAND) ACT, 1860.

23 & 24 Vict. c. 107.

28. Every person licensed under this Act to sell wine by retail shall, if required, sell or otherwise dispose of all such wine (except wine in bottle and quantities less than half a pint) by the gallon, quart, pint, or half-pint measure, sized or marked according to the standard, and shall also, if required by any guest or customer purchasing such wine, retail the same in a vessel sized or marked according to such standard. [Penalty—to be recovered within 7 days—not exceeding 40*s.* and forfeiture of illegal measure.] Imperial measures to be used.

One of the conditions (breach of which entails forfeiture of the licence) is, that the licensee shall not "use in selling any wine any measures which are not of the legal standard": Sect. 10 and Sched. No. 2.

Markets and Fairs.

THE MARKETS AND FAIRS CLAUSES ACT, 1847.

10 & 11 Vict. c. 14.

This Act is to be incorporated with the special Act, authorizing the establishment of the market or fair.

The sections given below have been incorporated with the Public Health Act, 1875 (38 & 39 Vict. c. 55, s. 167), with the Public Health (Ireland) Act, 1878 (41 & 42 Vict. c. 52, s. 103), and with the Burgh Police (Scotland) Act, 1892 (55 & 56 Vict. c. 55, s. 277).

Other provisions relating to markets and fairs are given, *ante*, p. 209.

The passages enclosed in brackets [ ] are summarized and not given verbatim.

10 & 11 Vict. c. 14.

Appliances to be provided.

21. The undertakers shall provide sufficient and proper weighing houses or places for weighing or measuring commodities sold in the market or fair, and shall keep therein proper weights, scales, and measures, according to the standard weights and measures for the time being for weighing such commodities as aforesaid, and shall appoint proper persons to attend to the weighing or measuring such commodities at all times during which the market or fair is holden.

The powers and duties of the undertakers devolve upon the urban authorities under the Public Health Acts (England and Ireland), and on the Commissioners under the Burgh Police (Scotland) Act, 1892, as noted above.

Articles to be weighed if requested by the buyer.

22. Every person selling or offering for sale any articles in the market or fair shall, if required so to do by the buyer, cause the same to be weighed or measured by the weights and scales or measures provided by the undertakers; and any such person who shall refuse, on demand, to cause such articles to be weighed or measured in manner aforesaid, shall be liable to a penalty not exceeding 40*s*.

Penalty.

Penalty on persons appointed refusing to weigh.

23. Every person appointed by the undertakers to weigh or measure any articles sold in the market or fair who shall refuse or neglect to weigh or measure the same when required shall be liable to a penalty not exceeding 40*s*.

Undertakers to keep proper machines for weighing carts laden with goods.

24. The undertakers shall provide sufficient and proper buildings or places for weighing carts in which goods are bought for sale within the market or fair or the prescribed limits, and shall keep therein machines and weights proper for that purpose, and shall from time to time appoint a person in every such building or place to afford the use of such machines to the public

by weighing such carts with or without their loading as may be required. 10 & 11 Vict. c. 14.

Carts to be weighed at one of the machines erected by the undertakers.

25. The driver of every such cart shall, at the request of the buyer or seller of such goods, or his agent, take such cart, with or without the loading thereof, to the nearest of the said weighing machines, and shall permit the same to be weighed; and if such cart be weighed with its load thereupon the driver shall, if required, take such cart after its load has been discharged to the weighing machine nearest to such place of discharge, and permit it to be re-weighed without such load; and if any such driver shall for the purposes aforesaid be required to take such cart a greater distance than half a mile, including the going to and returning from such machines respectively, the owner of the cart shall be paid for every horse which shall be used in drawing such cart twopence for the first half-mile, and a like sum for every additional half-mile; and such payment shall be made by the person requiring such cart to be weighed as aforesaid before the driver thereof shall be obliged to take it as aforesaid for the purpose of having it weighed.

Penalty on drivers for refusing to take carts to be weighed, etc.

26. The driver of any such cart who shall not, upon being so requested as aforesaid, and having such payment made or tendered as aforesaid, take the same to such weighing machine as hereinbefore directed, or who shall refuse to assist in the weighing of the same, shall forfeit to the person requiring such cart to be weighed a sum not exceeding twenty shillings.

Offences by drivers.

27. Every driver of any such cart weighed at any weighing machine, to be provided in pursuance of this or the special Act, who shall commit any of the following offences, shall be liable to a penalty not exceeding £5 for each offence; (that is to say),

10 & 11 Vict. c. 14.

If he at the time of weighing any such cart knowingly have anything in or about the same other than the proper loading thereof:

If he alter any ticket denoting the weight of any such cart, or the loading of the same:

If he make, use, or be privy to making or using, any ticket falsely stating the weight of any such cart or the loading thereof:

If he, after the weighing of any such cart with the loading thereof, remove any part of such loading, and afterwards dispose of or attempt to dispose of or represent the residue of such loading as being the full loading denoted by such ticket:

If he, between the time when the cart and the loading thereof have been so weighed, and the time when such cart is weighed without such loading, change the wheels of such cart, or make any other change upon it after being required to allow such cart to be weighed without the loading thereof:

If he be guilty of any other fraudulent contrivance to misrepresent the weight of any such cart or of the loading thereof.

Sellers or buyers committing frauds in weighing.

28. If the buyer or seller of any goods brought in any cart for sale within the market or fair, and which shall be required to be weighed as aforesaid, shall do anything to such cart or its loading whereby the true weight thereof respectively shall be altered before such weighing, he shall for every such offence be liable to a penalty not exceeding £5.

Offences by keepers of machines.

29. The person for the time being appointed to keep any weighing machine, provided in pursuance of this or the special Act, shall be liable to a penalty not exceeding £5 in any of the following cases; (that is to say),

If he wilfully neglect, on application, duly to weigh any cart, with or without its loading, as the case may be, that is brought to the machine that is kept by him to be weighed: 10 & 11 Vict. c. 14.

If he do not fairly weigh every such cart, with or without loading, as the case may be:

If he do not deliver to the buyer or seller of any such loading, or to any person interested therein, on application, a ticket or account specifying the true weight of such cart, with or without such loading, as may be required:

If he give to the driver of any such cart a false ticket or account of the weight of such cart, with or without the loading thereof:

If he weigh any cart, with or without its loading, knowing that anything has been done to such cart or to the loading thereof to alter the true weight thereof respectively:

If he knowingly assist in or connive at any fraud concerning the weighing of any cart or the loading thereof, or make or connive at making any false representation of the weight of the same respectively.

30. Every person who shall knowingly act or assist in committing any fraud respecting the weighing or weight of any cart, or the loading thereof, in pursuance of this or the special Act, shall for every such offence be liable to a penalty not exceeding £5. Accessories.

THE MARKETS AND FAIRS (WEIGHING OF CATTLE) ACT, 1887.

50 & 51 Vict. c. 27.

Amended by the Act of 1891.

Portions in brackets [ ] are summarized, and not given verbatim.

Application of Act.

2. This Act, save as is hereinafter provided, shall apply to all markets and fairs in which tolls are for the time being authorized to be taken and actually are taken in respect of cattle by any company, corporation, or person; and every such company, corporation, or person is in this Act called "the market authority."

Interpretation.

3. In this Act the word "cattle" includes ram, ewe, wether, lamb, and swine.

Accommodation for weighing cattle to be provided.

4. In or near to every market or fair to which this Act applies, the market authority shall provide and maintain sufficient and proper buildings or places for weighing cattle brought for sale within the market or fair, and shall keep therein or near thereto weighing machines and weights for the purpose of weighing cattle, and shall appoint proper persons to have charge of such machines and weights and to afford the use of such machines and weights to the public for weighing cattle as may be from time to time required.

The market authority shall have the accuracy of such weighing machines and weights tested at least twice in every year by the local inspector of weights and measures of and for the county, borough, or place where the market is situate, and the cost of such testing shall be borne by such market authority.

If the market authority fail to comply with the provisions of this section, it shall not be lawful for them to demand, receive, or recover any toll whatever in respect of any cattle brought to the market or fair for sale so long as such failure continues, but this enactment shall not apply till after January 1, 1888.

50 & 51 Vict. c. 27.

Tolls.

Any person who demands or receives any toll in respect of cattle in any market or fair to which for the time being this Act applies, but in which the market authority have not complied with the provisions of this Act, shall be liable on summary conviction to a fine not exceeding £5.

This section is imperative. The market authority must erect a permanent structure, and not a movable machine. The urban authority cannot object on the ground that the place used for the market is also a highway, and that the proposed erection would be an obstruction: *M'Intosh* v. *Romford Local Board*, 61 L. T. 185.

Unless exempted by order of the Board of Agriculture, or of the Irish Land Commission, the market authority must provide and maintain to the satisfaction of the Board or Commission sufficient and suitable accommodation for weighing cattle; penalty for neglect as in the above section: 54 & 55 Vict. c. 70, ss. 2, 5.

Cattle to be weighed at the option of seller or buyer.

5. Every person selling, offering for sale, or buying any cattle in the market or fair provided with accommodation for weighing cattle may require such cattle to be weighed, and the tolls payable in respect of the weighing shall be paid by the person requiring the cattle to be weighed to the person authorized by the market authority to receive the tolls.

Refusal to weigh cattle or to give tickets, etc.

6. Every person appointed by the market authority to weigh cattle sold in the market or fair, who—

(*a*) refuses or neglects to weigh the same when required; or

(*b*) refuses or neglects to deliver to the seller or buyer a ticket specifying the true weight of the cattle weighed; or

50 & 51 Vict. c. 27.

(*c*) gives to any person a false ticket or account of any cattle weighed;

shall be liable on summary conviction to a fine not exceeding 40*s.* and not less than 2*s.* 6*d.*

Fraud.

7. Every person who knowingly acts or assists in committing any fraud respecting the weighing of any cattle weighed in pursuance of this Act, shall for every such offence be liable on summary conviction to a fine not exceeding £5.

Tolls for weighing cattle.

8. The market authority may from time to time (unless otherwise expressly provided by any Act) demand and receive in respect of weighing of cattle tolls not exceeding the amounts specified in the Schedule to this Act, or such other amounts as may be authorized by the Local Government Board to be taken by the market authority; and sections 36 to 41 (both included) of the Markets and Fairs Clauses Act, 1847, [10 & 11 Vict. c. 14] shall apply to the tolls mentioned in this section, as if this Act were a special Act, and the market authority were the undertakers.

The tolls mentioned in the Schedule are "For every head of cattle other than sheep or swine, not exceeding twopence. For sheep or swine, every five or less number, not exceeding one penny."

Power to exempt certain markets and fairs from the provisions of this Act.

9.—(1) The market authority of any market or fair may at any time apply to the *Board of Agriculture* to be exempted from the provisions of this Act, on the ground that the sale of cattle at such market or fair is or is likely to be so small as to render it inexpedient to enforce the provision and maintenance of a place for weighing cattle and of a weighing machine under this Act; and thereupon the *Board of Agriculture* may by order declare that this Act shall not apply to such market or fair until after the expiration of a time not exceeding three years to be limited by such order. Any order made

under this section may at any time be wholly or partially rescinded, altered, or extended by any subsequent order of the *Board of Agriculture.* 50 & 51 Vict. c. 27.

(2) This Act shall not apply to any market or fair to which any order under this section applies so long as it is declared by such order that this Act shall not apply thereto.

The powers under this section granted to the Local Government Board were transferred to the Board of Agriculture in England and Scotland, and in Ireland to the Irish Land Commission.

10. In the application of this Act to Scotland and Ireland this Act shall be read and construed as if for the expression, "the Local Government Board" there were substituted, as regards Scotland, the expression "the Secretary for Scotland," and as regards Ireland, the expression "the *Irish Land Commission.*" Application of Act to Scotland and Ireland.

The words in italics denote the effect of sects. 1 and 5 of 54 & 55 Vict. c. 70.

SCHEDULE.

(Noted to sect. 8, above.)

THE MARKETS AND FAIRS (WEIGHING OF CATTLE) ACT, 1891.

54 & 55 VICT. c. 70.

An Act to amend the Markets and Fairs (Weighing of Cattle) Act, 1887. [5th August, 1891.

WHEREAS it is expedient to amend the Markets and Fairs (Weighing of Cattle) Act, 1887 [50 & 51 Vict. c. 27] (hereinafter referred to as the principal Act):

Be it therefore enacted, etc.

1. As from the passing of this Act the powers under section 9 of the principal Act of the Local Government Board as to England and Wales and of the Secretary for Transfer of powers under.

54 & 55 Vict. c. 70.

Scotland as to Scotland shall be transferred to and vest in the Board of Agriculture, and the powers under the same section of the Local Government Board for Ireland shall be transferred to and vest in the Irish Land Commission.

Amendment of s. 4 as to accommodation for weighing cattle.

2.—(1) The market authority of every market and fair to which the principal Act for the time being applies shall, unless exempted by order of the Board of Agriculture from the requirements of this section, provide and maintain to the satisfaction of the Board sufficient and suitable accommodation for weighing cattle.

(2) Default in complying with the requirements of this section shall be deemed default in complying with the requirements of section 4 of the principal Act.

Statistics as to weight and sale of cattle.

3.—(1) The market authority of every market and fair held in any of the places mentioned in the schedule to this Act shall send to the Board of Agriculture returns, at such intervals, and in such form and with such particulars as the Board of Agriculture by order prescribe, showing, so far as the market authority can ascertain the same, the number of cattle entering and the number and weight of cattle weighed at the market or fair, and the price of the cattle sold thereat. Such market authority may, for the purpose of making a prescribed return, cause any cattle which have been sold at the market to be weighed without fee.

(2) The Board of Agriculture shall publish the returns so sent, or abstracts thereof, or extracts therefrom, in such manner as they think most expedient for the information of the public.

(3) If a market authority wilfully makes default in complying with the requirements of this section, it shall for each offence be liable on summary conviction to a fine not exceeding £20, or in case of a continuing offence to a

fine not exceeding £10 for every day during which the offence continues. 54 & 55 Vict. c. 70.

(4) If any person makes any false or fraudulent statement in any return made in pursuance of this section he shall be guilty of a misdemeanor.

(5) The Board of Agriculture may from time to time vary or add to the list of places in the schedule to this Act.

4.—(1) An auctioneer shall not, unless exempted by order of the Board of Agriculture from the requirements of this section, sell cattle at any mart where cattle are habitually or periodically sold, unless there are provided at that mart similar facilities for weighing cattle as are required by the principal Act and this Act in the case of cattle sold at a market or fair to which the principal Act applies. Application of Act to auction marts.

(2) Every auctioneer who in any place from which returns are required to be made under this Act sells cattle at any such mart as aforesaid shall, unless exempted as aforesaid, make the like returns to the Board of Agriculture with respect to cattle entering, weighed, and sold at that mart as are required by this Act to be made by a market authority, and shall be subject to the like penalty for making any false or fraudulent statement in any such return.

(3) If any such auctioneer makes default in complying with the requirements of this section, the auctioneer, or, if he is in the employment of any person, the person by whom he is employed, shall for each offence be liable on summary conviction to a fine not exceeding £20, or in case of a continuing offence to a fine not exceeding £10 for every day during which the offence continues. . . .

5. This Act shall, in its application to Ireland, be construed as if for the expression "the Board of Agriculture" were substituted the expression "the Irish Land Commission." Application to Ireland.

54 & 55 Vict. c. 70.

Construction and short title.

6. This Act shall be construed as one with the principal Act, and may be cited as the Markets and Fairs (Weighing of Cattle) Act, 1891, and the principal Act and this Act may be cited together as the Markets and Fairs (Weighing of Cattle) Acts, 1887 and 1891.

THE MILLS ACT, 1796.

36 Geo. 3, c. 85.

This Act applies to England, but it is doubtful whether it extends to Scotland.

Weighing appliances to be provided.

1. Every miller or other person keeping a mill for the grinding of corn shall have in such mill a true and equal balance, with proper weights according to the standard of the Exchequer; . . . and every miller or other person as aforesaid in whose mill shall be found no balance or weights shall forfeit and pay a sum not exceeding 40*s.*; . . .

Parts omitted repealed by 41 & 42 Vict. c. 49, s. 86.

2. [Millers to weigh corn before and after grinding. Penalty not exceeding 40*s.*]

8. [Penalties to be recovered summarily. Appeal to Quarter Sessions.]

9. [Informations to be laid within ten days.]

Local Authorities.

THE LOCAL GOVERNMENT ACT, 1888.

51 & 52 Vict. c. 41.

Powers transferred to county councils.

3. There shall be transferred to the council of each county, on and after the appointed day, the administrative business of the justices of the county in quarter sessions

assembled, that is to say, all business done by the quarter sessions or any committee appointed by the quarter sessions, in respect of the several matters following, namely— 51 & 52 Vict. c. 41

* * * * *

(ix.) The tables of fees to be taken by and the costs to be allowed to any inspector, analyst, or person holding any office in the county other than the clerk of the peace and clerks of the justices;

(x.) The appointment, removal, and determination of salaries, of . . . any officer whose remuneration is paid out of the county rate other than the clerk of the peace and the clerks of the justices;

* * * *

(xiii.) The execution as local authority of the Acts relating to . . . weights and measures, and to gas meters, etc.

THE LOCAL GOVERNMENT (SCOTLAND) ACT, 1889.

52 & 53 Vict. c. 50.

11. Subject to the provisions of this Act, there shall be transferred to and vested in the council of each county, on and after the appointed day, or at such times as are in this Act in that behalf respectively specified:— Powers transferred to county councils.

* * * * *

(5) The administrative powers and duties of the justices of the peace of the county in general or

52 & 53 Vict. c. 50.

special or quarter sessions assembled in respect of the several matters following, namely:

(i.) The execution as local authority of the Acts relating to gas meters, . . . to weights and measures, . . .

* * * * *

The provisions of any Act of Parliament conferring, imposing, or regulating the powers and duties by this Act transferred or regulating the proceedings under any such Act shall remain in full force and effect, except in so far as they are repealed by or are inconsistent with the provisions of this Act.

THE MERCHANT SHIPPING ACT, 1894.

57 & 58 Vict. c. 60.

Weights and measures on board.

201.—(1) The master of a ship shall keep on board proper weights and measures for determining the quantities of the several provisions and articles served out, and shall allow the same to be used at the time of serving out the provisions and articles in the presence of a witness whenever any dispute arises about the quantities.

(2) If the master of a ship fails without reasonable cause to comply with this section, he shall for each offence be liable to a fine not exceeding £10.

The foregoing section is inserted for purposes of reference. By section 713 the duty of enforcing the provisions of this Act is cast on the Board of Trade, except where otherwise provided. There is no provision authorizing the local authorities or inspectors of weights and measures to inspect the weights or measures here mentioned. In the cases of Factories, Workshops, and Coal Mines, where weighing appliances are used for a similar purpose, powers are expressly given

to the inspectors to inspect such appliances, hence it appears that the inspectors of weights and measures have no power to inspect, etc., weights on board ships that are used for the above purpose. 57 & 58 Vict. c. 60.

In the circular letter of the Board of Trade, dated 5th September, 1906, the local authorities were informed that the Board had obtained the opinion of the Law Officers of the Crown on this matter. The letter contained the following passage: "The opinion so obtained confirms the view previously taken by the Board, and is to the effect that proper weights, etc., for determining quantities stipulated for in an agreement necessarily made pursuant to Act of Parliament by reference to weight and measure, must be in all respects such weights and measures as are required by the general laws of the land, and that a contract entered into with a crew giving them certain weights and measures of provisions in part return for services rendered, is a contract for trade within the meaning of sect. 19 of the Act of 1878. In the opinion of the Law Officers a ship is a place within which an inspector authorized under sect. 44 of the same Act may exercise his powers under that section; and also by sect. 685 (1) of the Merchant Shipping Act, 1894, the jurisdiction of the justice upon which the power of the inspector depends clearly includes a ship."—*Annual Report*, 1905–6, page 25.

If an inspector act on the opinion of the Law Officers, he acts under the Act of 1878. There is no suggestion in the opinion given that the inspector can enforce the Merchant Shipping Act by proceeding for an offence against the section set out above. The reasons given by the Law Officers appear also to apply to proceedings under Food and Drugs Act, etc.

THE MERCHANDISE MARKS ACT, 1887.

50 & 51 Vict. c. 28.

[This Act is here inserted so far as it applies to weights or measures.]

An Act to consolidate and amend the Law relating to Fraudulent Marks on Merchandise. [23rd August, 1887.]

Be it enacted, etc.

2.—(1) Every person who— Offences as to trade marks and trade description.

* * * * *

(*d*) applies any false trade description to goods; or

(*f*) causes any of the things above in this section mentioned to be done,

50 & 51 Vict. c. 28.

shall, subject to the provisions of this Act, and unless he proves that he acted without intent to defraud, be guilty of an offence against this Act.

(2) Every person who sells, or exposes for, or has in his possession for, sale, or any purpose of trade or manufacture, any goods or things to which any forged trade mark or false trade description is applied, or to which any trade mark or mark so nearly resembling a trade mark as to be calculated to deceive is falsely applied, as the case may be, shall, unless he proves—

(*a*) That having taken all reasonable precautions against committing an offence against this Act, he had at the time of the commission of the alleged offence no reason to suspect the genuineness of the trade mark, mark, or trade description; and

(*b*) That on demand made by or on behalf of the prosecutor, he gave all the information in his power with respect to the persons from whom he obtained such goods or things; or

(*c*) That otherwise he had acted innocently;

be guilty of an offence against this Act.

(3) Every person guilty of an offence against this Act shall be liable—

(i.) on conviction on indictment to imprisonment, with or without hard labour, for a term not exceeding two years, or to fine, or to both imprisonment and fine; and

(ii.) on summary conviction to imprisonment, with or without hard labour, for a term not exceeding four months, or to a fine not exceeding £20, and in the case of a second or subsequent conviction to imprisonment, with or without hard labour, for a term not exceeding six months, or to a fine not exceeding £50; and

(iii.) in any case, to forfeit to Her Majesty every chattel, article, instrument, or thing by means of or in relation to which the offence has been committed. 50 & 51 Vict. c. 28.

(4) The court before whom any person is convicted under this section may order any forfeited articles to be destroyed or otherwise disposed of as the court thinks fit.

(5) If any person feels aggrieved by any conviction made by a court of summary jurisdiction, he may appeal therefrom to a court of quarter sessions.

(6) Any offence for which a person is under this Act liable to punishment on summary conviction may be prosecuted, and any articles liable to be forfeited under this Act by a court of summary jurisdiction may be forfeited, in manner provided by the Summary Jurisdiction Acts: Provided that a person charged with an offence under this section before a court of summary jurisdiction shall, on appearing before the court, and before the charge is gone into, be informed of his right to be tried on indictment, and if he requires be so tried accordingly.

Sub-section (1 *d*) is the most important clause in this section from the point of view of weights and measures, for under the next section a "trade description" includes representations as to measure and weights.

Penalties recovered in a Metropolitan Police Court are payable to the Receiver for the Metropolitan Police District under 2 & 3 Vict. c. 71, s. 47.

A brewer sent by his carman to a customer a cask of beer, and the carman delivered, along with the cask, an invoice in which the cask was described as "a barrel." The cask was of a capacity of less than 36 gals. It was charged against the brewer that, as the term "barrel" in the beer trade meant a cask holding 36 gals., the delivery of the invoice was an application of a false trade description. *Held*, that an invoice might constitute the application of a false trade description, and that evidence of previous transactions between the parties was admissible on the question of whether there was intent to defraud: *Budd* v. *Lucas*, 1891, 1 Q. B. 408.

Sub-section (1 *a*) is directed to descriptions applied to coverings

50 & 51 Vict. c. 28.

purporting to contain a specified or indicated number, quantity, etc., of goods, as well as to descriptions attached to the goods themselves. It meets frauds, such as the practice of marking upon cotton goods the number of laps or folds by a figure so placed as to be "commonly taken" to indicate the number of yards in the marked piece, the true number of yards being in fact less than the number marked. It has been questioned whether the words in the clause cover indications of width, dimension, and weight per unit of length, which are of great importance in the textile trades; but it is submitted that they do, and it is said that the Manchester magistrates have so construed them. . . . In a civil case it has been held that goods done up in cases and supplied according to contract, the cases being marked as one pound cases, could not be forced upon a purchaser if they were actually under the weights indicated, although not deficient by more than an alleged customary allowance, on the ground that the purchaser could not sell them without committing an offence under the Act.—*Kerly on Trade Marks*, p. 573.

An intention to defraud the purchaser is not necessary for the commission of the offence under (1 *d*), of applying a false trade description to goods; *e.g.* one who sells liquids in bottles marked with another's name as well as his own as "manufacturer," does not act "innocently" within 2 (*c*): *Wood* v. *Burgess*, 24 Q. B. D. 162; 53 J. P. 772. One who "knowingly" applies a false description, but "without intent to defraud," does not act "innocently": *Haddow* v. *Neilson*, 2 F (Just. Ca.) 19.

The words "acted innocently" mean innocently of any intention to infringe the Act of Parliament, and covers the case of an auctioneer who, entertaining doubts as to the genuineness of a mark on china, only sold it for what it was worth: *Christie* v. *Cooper*, 1900, 2 Q. B. 522.

A purchaser in a shop asked for "two half-pounds of tea." He was handed two packets, neither of which contained half a pound of tea. Both on being opened were found to contain on the inner packet the notice, "The weight of this package including the wrapper is half a pound." That statement was true. *Held*, that no offence was committed against this section as no false description was physically applied to the goods: *Langley* v. *Bombay Tea Co.*, 1900, 2 Q. B. 460.

A packet of tea was sold on which the words "Quarter pound gross weight" were printed on the lead or silver paper of the packet. Under the string was placed a ticket that could be read by the purchaser. On it was a notice that a present was given to a purchaser of a quarter of a pound and upwards, and on the other side the words "Quarter pound 2*s*. 8*d*. tea ticket." *Held*, that the ticket constituted a false trade description: *Star Tea Co.* v. *Whitworth*, 91 L. T. 87.

The proprietor of a shop is responsible for the acts of his salesmen for which he may be convicted of an offence. A mere verbal

representation without an invoice is not an offence against the Act: *Coppen* v. *Moore*, 1898, 2 Q. B. 300, 306. 50 & 51 Vict. c. 28.

In response to an order for 1 kilderkin of mild ale, a brewery company supplied a cask. With the cask was sent an invoice in the following terms: ". . . Bought of N. E. Breweries, Ld. . . . Kils. 1. Mild Ale. B. M. Pe. brl. 48*s*.—£1." On other invoices sent on other occasions and on duplicate of above retained by the brewery company was a notice in the words, "Our casks are vessels to carry beer, not measures, but care is taken that they contain not less than their reputed quantities." Evidence was given of the variation in capacity caused by cooperage, and also that other kilderkin casks varied, some less and some more than 18 gals. in capacity. The cask in question held one pint less than 18 gals. *Held*, that the invoice constituted a representation that the cask contained 18 gals., and was therefore a false trade description, and that as the brewery company knew that cooperage diminished the capacity, they had not "acted innocently" within the meaning of the proviso, and that there was evidence to justify a conviction: *N. E. Breweries Co.* v. *Gibson*, 12 M. R. 277.

3.—(1) For the purposes of this Act— . . . Definitions. 46 & 47 Vict. c. 57.

The expression "trade description" means any description, statement, or other indication, direct or indirect,

(*a*) as to the number, quantity, measure, gauge, or weight of any goods,

* * * * *

and the use of any figure, word, or mark which, according to the custom of the trade, is commonly taken to be an indication of any of the above matters, shall be deemed to be a trade description within the meaning of this Act:

The expression "false trade description" means a trade description which is false in a material respect as regards the goods to which it is applied, and includes every alteration of a trade description, whether by way of addition, effacement, or otherwise, where that alteration makes the description false in a material respect, and the fact that a trade

50 & 51 Vict. c. 28.

description is a trade mark, or part of a trade mark, shall not prevent such trade description being a false trade description within the meaning of this Act:

The expression "goods" means anything which is the subject of trade, manufacture, or merchandise:

The expressions "person," "manufacturer, dealer, or trader," and "proprietor" include any body of persons corporate or unincorporate:

The expression "name" includes any abbreviation of a name.

* * * * *

Sub-section (1 *a*) brings representations as to weight or measure of goods within the terms "trade description" and "false trade description," and thereupon the provisions of the Act apply.

On buying mutton the purchaser was informed it was "New Zealand" mutton. He requested the salesman to mark on the invoice that it was New Zealand meat, who then wrote on the invoice the letters N. M. The mutton, in fact, was not from New Zealand. *Held*, that a false trade description had been applied by adding the letters "N. M.," although no evidence was called to show that N. M. by any custom of trade denoted New Zealand mutton: *Cameron* v. *Wiggins*, 1901, 1 K. B. 1.

Applying marks and descriptions.

5.—(1) A person shall be deemed to apply a trade mark or mark or trade description to goods who—

(*a*) applies it to the goods themselves; or

(*b*) applies it to any covering, label, reel, or other thing in or with which the goods are sold or exposed or had in possession for any purpose of sale, trade, or manufacture; or

(*c*) places, encloses, or annexes any goods which are sold or exposed or had in possession for any purpose of sale, trade, or manufacture, in, with, or to any covering, label, reel, or other thing to which a trade mark or trade description has been applied; or

(*d*) uses a trade mark or mark or trade description in any manner calculated to lead to the belief that the goods in connection with which it is used are designated or described by that trade mark or mark or trade description. 50 & 51 Vict. c. 28.

(2) The expression "covering" includes any stopper, cask, bottle, vessel, box, cover, capsule, case, frame, or wrapper; and the expression "label" includes any band or ticket.

A trade mark, or mark, or trade description, shall be deemed to be applied whether it is woven, impressed, or otherwise worked into, or annexed, or affixed to the goods, or to any covering, label, reel, or other thing.

* * * * *

"Apply" means apply physically: *Langley* v. *Bombay Tea Co.*, noted to sect. 2 (2) above.

An invoice is included in sub-section (1) above, and might constitute the application of a false trade description: *Budd* v. *Lucas*, noted *ante*, p. 381.

6. Where a defendant is charged with . . . or with applying to goods any false trade description, or causing any of the things in this section mentioned to be done, and proves— Exemption of certain persons employed in ordinary course of business.

(*a*) That in the ordinary course of his business he is employed, on behalf of other persons, to . . . or as the case may be, to apply marks or descriptions to goods, and that in the case which is the subject of the charge he was so employed by some person resident in the United Kingdom, and was not interested in the goods by way of profit or commission dependent on the sale of such goods; and

(*b*) That he took reasonable precautions against committing the offence charged; and

50 & 51 Vict. c. 28.

(*c*) That he had, at the time of the commission of the alleged offence, no reason to suspect the genuineness of the . . . or trade description; and

(*d*) That he gave to the prosecutor all the information in his power with respect to the persons on whose behalf the . . . or description was applied—

he shall be discharged from the prosecution, but shall be liable to pay the costs incurred by the prosecutor, unless he has given due notice to him that he will rely on the above defence.

Rules as to evidence.

10. In any prosecution for an offence against this Act,—

(1) A defendant, and his wife or her husband, as the case may be, may, if the defendant thinks fit, be called as a witness, and, if called, shall be sworn and examined, and may be cross-examined and re-examined in like manner as any other witness.

* * * * *

If the person charged gives, or calls evidence to show that he acted without intent to defraud, the prosecutor may give rebutting evidence, and in particular, evidence of transactions similar to the offence charged, in which the person charged was concerned, and antecedent (but it is said not subsequent) to that offence: *Kerly on Trade Marks*, p. 605.

Punishment of accessories.

11. Any person who, being within the United Kingdom, procures, counsels, aids, abets, or is accessory to the commission, without the United Kingdom, of any act, which, if committed in the United Kingdom, would under this Act be a misdemeanour, shall be guilty of that misdemeanour as a principal, and be liable to be indicted, proceeded against, tried, and convicted in any county or place in the United Kingdom in which he may be, as if the misdemeanour had been there committed.

Persons who aid and abet the commission of an offence by another within the United Kingdom may be dealt with under sect. 5 of the Summary Jurisdiction Act, 1848, *post*, p. 393. 50 & 51 Vict. c. 28.

12. . . .

(3) Any goods or things forfeited under this section, or under any other provision of this Act, may be destroyed or otherwise disposed of, in such manner as the court by which the same are forfeited may direct, and the court may, out of any proceeds which may be realized by the disposition of such goods (all trade marks and trade descriptions being first obliterated), award to any innocent party any loss he may have innocently sustained in dealing with such goods. Disposal of forfeiture.

13. The [Vexatious Indictments Act, 1859,] shall apply to any offence punishable on indictment under this Act, in like manner as if such offence were one of the offences specified in section one of that Act, but this section shall not apply to Scotland. Extension of 22 & 23 Vict. c. 17, to offences under this Act.

14. On any prosecution under this Act the court may order costs to be paid to the defendant by the prosecutor, or to the prosecutor by the defendant, having regard to the information given by and the conduct of the defendant and prosecutor respectively. Costs of defence or prosecution.

This section gives the Court unlimited jurisdiction over the costs, without reference to the result of the prosecution; except so far as this is made a subject for consideration by the reference to conduct: *Kerly on Trade Marks*, p. 616.

15. No prosecution for an offence against this Act shall be commenced after the expiration of three years next after the commission of the offence, or one year next after the first discovery thereof by the prosecutor, whichever expiration first happens. Limitation of prosecution.

19.—(1) This Act shall not exempt any person from any action, suit, or other proceeding which might, but for the provisions of this Act, be brought against him. Savings.

50 & 51 Vict. c. 28.

(2) Nothing in this Act shall entitle any person to refuse to make a complete discovery, or to answer any question or interrogatory in any action, but such discovery or answer shall not be admissible in evidence against such person in any prosecution for an offence against this Act.

(3) Nothing in this Act shall be construed so as to render liable to any prosecution or punishment any servant of a master resident in the United Kingdom who *bonâ fide* acts in obedience to the instructions of such master, and, on demand made by or on behalf of the prosecutor, has given full information as to his master.

Application of Act to Scotland.

21. In the application of this Act to Scotland the following modifications shall be made:—

The expression "Summary Jurisdiction Acts" means the Summary Procedure Act, 1864, and any Acts amending the same:

The expression "justice" means sheriff:

The expression "court of summary jurisdiction" means the Sheriff Court, and all jurisdiction necessary for the purpose of this Act is hereby conferred on sheriffs.

Application of Act to Ireland.

22. In the application of this Act to Ireland, the following modifications shall be made:—

The expression "Summary Jurisdiction Acts" means, so far as respects the police district of Dublin metropolis, the Acts regulating the powers and duties of justices of the peace of such district, and as regards the rest of Ireland means the Petty Sessions (Ireland) Act, 1851 [14 & 15 Vict. c. 93], and any Act amending the same:

The expression "court of summary jurisdiction" means justices acting under those Acts.

Repeal of 25 & 26 Vict. c 88.

23. The Merchandise Marks Act, 1862, is hereby repealed, and any unrepealed enactment referring to any

enactment so repealed shall be construed to apply to the corresponding provision of this Act; . . .

THE HERRING FISHERY (SCOTLAND) ACT, 1889.

[Only those sections which apply to weights or measures are given.]

Extent of Act.

2. This Act extends only to Scotland, and to the parts of the sea adjoining Scotland.

Use of cran or quarter cran measure.

4. Any person buying, selling, delivering, or receiving fresh herrings in the Scotch herring fishery shall be entitled to use for the purpose thereof the measure known as the cran, or a quarter cran measure, being a measure of such capacity that four times its content, when filled with herrings, shall be equal to one cran; and such measure shall be made of wood, or of such other material as the Fishery Board for Scotland shall direct, and shall be made and branded or otherwise marked in accordance with any regulations for the time being in force of the Fishery Board for Scotland, which regulations that Board are hereby authorized to make, and from time to time to alter and revoke as they see fit.

These measures made, branded, or otherwise marked in all respects in conformity with the regulations for the time being in force of the said Board, shall be the only legal measures for use in buying, selling, delivering, or receiving fresh herrings in the Scotch herring fishery; and any person using any box, basket, or other measure not so made, branded, or otherwise marked shall be liable, on conviction under the Summary Jurisdiction (Scotland) Acts, to a fine not exceeding £5 for the first offence, and

not exceeding £20 for the second or any subsequent offence; and also to the forfeiture of the measure or measures, which may be seized and destroyed or otherwise disposed of by any superintendent of the herring fishery or other officer employed in the execution of the Herring Fishery (Scotland) Acts:

Provided always, that nothing in this Act contained shall prevent the sale of herrings by weight or number or in bulk.

THE WEIGHTS AND MEASURES (IRELAND) AMENDMENT ACT, 1862.

25 & 26 Vict. c. 76.

PART III.

Prevention of Frauds.

Penalty on counterfeiting of brand.

14. If any person commit any of the following offences he shall for each offence be liable to a penalty not exceeding five pounds:

(1) If he, with intent to defraud, counterfeit or procure to be counterfeited any brand or stamp used by or under the authority of the owner or lessee of a market or fair, or of any person having by law the control of a market or fair, to denote the weight, measure, or quality of any article sold in the market or fair, or within the prescribed limits, during the holding of the market or fair, or of any cask, firkin, or other vessel, covering, or thing in which such article is sold, or the impression of any such brand or stamp:

(2) Or, with the like intent, use or procure to be used any such counterfeit brand or stamp or impression: 25 & 26 Vict. c. 76.

(3) Or, with the like intent, alter an impression of any such genuine brand or stamp:

(4) Or, with the like intent, have in his possession anything having thereon an impression of any such counterfeit brand or stamp, or a fraudulently altered impression of any such genuine brand or stamp:

(5) Or, with the like intent, transfer or apply any cask, firkin, or other vessel, covering, or thing, having thereon an impression of any such genuine brand or stamp, to any article other than that for denoting the weight, measure, or quality whereof such impression was made on such cask, firkin, or other vessel, covering, or thing; or in any other manner alter the *bonâ fide* application of an impression of any such genuine brand or stamp:

(6) [*Repealed. Statute Law Revision Act*, 1893.]

(7) Or, with intent to defraud, alter any ticket specifying the weight of any such article:

(8) Or, with intent to defraud, make or use, or be privy to the making or using, of any such ticket, falsely stating the weight of any such article, or of any covering, cart, or load:

(9) Or shall dispose of, sell, or cause to be sold any weight or measure having a false or counterfeit stamp, or a stamp purporting to resemble a genuine stamp.

15. If any person shall wilfully pack up or mix, or cause to be packed up or mixed, with or in any butter contained in any firkin or cask, any salt, pickle, or Penalty for fraudulently increasing

25 & 26 Vict. c. 76.

weight of butter in casks.

other substance, with intent to increase the weight of such butter, and shall bring or send any butter so packed or mixed to any market for sale, he shall be liable to pay a fine not exceeding forty shillings, or be imprisoned for any period not exceeding one month, as the justice or justices shall determine.

Penalty for fraudulently increasing weight of fleeces.

16. If any person shall wind or cause to be wound in any fleece any wool not being sufficiently rivered or washed, or wind or cause to be wound within any fleeces any deceitful locks, cots, skin, or lamb's wool, or any substance, matter, or thing whereby the fleece may be rendered more weighty, to the deceit and loss of the buyer, such person shall be liable to a penalty of two shillings for every fleece so fraudulently made up.

PART IV.

General Provisions.

Penalties how recoverable.

17. Any penalty recoverable under the provisions of this Act shall be recoverable in a summary way, with respect to the police district of Dublin metropolis, subject and according to the provisions of any Act regulating the powers and duties of Justices of the Peace for such district, or of the police of such district, and with respect to other parts of Ireland, before a Justice or Justices of the Peace sitting in Petty Sessions, subject and according to the provisions of "The Petty Sessions (Ireland) Act, 1851," and any Act amending the same.

Limitation of proceedings for penalties.

18. No penalty imposed by Part Three of this Act shall be recovered unless proceedings for recovery thereof are commenced within 3 months next after the commission of the alleged offence, or in case of a continuing offence within 3 months after the alleged offence has ceased to be committed.

19. Nothing in this Act shall be taken to prevent any person from being indicted for any indictable offence made punishable on summary conviction by this Act, or to prevent any person from being liable under any other Act or otherwise to any other or higher penalty or punishment than is provided for any offence by this Act, but so that no person be punished twice for the same offence.

25 & 26 Vict. c. 76.

Nothing to prevent persons being indicted for offences.

AIDING AND ABETTING.

The Summary Jurisdiction Act, 1848.

5. Every person who shall aid, abet, counsel, or procure the commission of any offence which is or hereafter shall be punishable on summary conviction, shall be liable to be proceeded against and convicted for the same, either together with the principal offender, and before or after his conviction; and shall be liable on conviction to the same forfeiture and punishment as such principal offender is or shall be by law liable, and may be proceeded against and convicted either in the county, riding, division, liberty, city, borough, or place where such principal offender may be convicted, or in that in which such offence of aiding, abetting, counselling, or procuring may have been committed.

11 & 12 Vict. c. 43.

Punishment of aiders and abettors.

An aider and abettor may be convicted, though the principal be acquitted: *R.* v. *Burton*, 13 Cox, 71.

APPENDIX.

FORM OF RECOGNIZANCE.

[Sect. 43 of the Act of 1878, *ante*, p. 170.]

To WIT, be it remembered, that on the [*date, name and full address of inspector*] inspector of weights and measures personally came before me [*name of the Justice*] one of Her Majesty's Justices of the Peace for [*name of jurisdiction*], and acknowledged himself to owe to our Sovereign Lady the Queen the sum of £200 of good and lawful money of Great Britain, to be made and levied of his goods and chattels, land and tenements, to the use of our said Lady the Queen, her heirs and successors, if the said [*name of inspector*] shall fail in the condition hereunder written.

THE CONDITION of this Recognizance is such that if the above bounden [*name of inspector*] shall duly perform the duties of the office of Inspector of Weights and Measures for the [*name of locality*], and shall duly pay at the times fixed (or to be fixed) by the local authority of the said [*name of place*], all fees received by him under the Weights and Measures Acts, etc., and shall keep in safety the local standards and the stamps and appliances for verification committed to his charge, and shall duly surrender them immediately on his removal or other cessation from office to the person appointed by the said local authority to receive them, then this recognizance to be void, otherwise to remain in full force.

Taken and acknowledged, the day and year first above mentioned, at [*name of place*] before me, the undersigned one of Her Majesty's Justices of the Peace for the said [*name of jurisdiction*].

SCALE OF FEES

Approved by the Lords Commissioners of H.M. Treasury to be taken by the Board of Trade on the Examination and Testing of Appliances, etc., in pursuance of Section 6 of the Weights and Measures Act, 1904.

—	Preliminary Examination.			Final Examination and Testing.		
	£	s.	d.	£	s.	d.
1. Measures of Length and Capacity .	1	0	0	2	0	0
2. Weights	0	10	0	1	0	0
3. Weighing Instruments:—						
(*a*) Balances and Scale Beams with equal arms	1	0	0	2	0	0
(*b*) Weighing Instruments with unequal arms, not being Compound-lever Weighing Machines	1	0	0	3	0	0

SCALE OF FEES—*continued.*

—	Preliminary Examination.			Final Examination and Testing.		
	£	s.	d.	£	s.	d.
(*c*) Compound-lever Machines:—						
1 ton and under . . .	1	0	0	3	0	0
Above 1 ton but not exceeding 5 tons	2	0	0	4	0	0
Above 5 tons but not exceeding 10 tons	3	0	0	5	0	0
Above 10 tons	5	0	0	7	0	0
(*d*) Automatic Weighing Machines not falling in classes (*a*), (*b*), or (*c*):—						
(1) Weighing quantities up to and including 112 lb. .	1	0	0	3	0	0
(2) Weighing quantities over 112 lb.	2	0	0	5	0	0
(*e*) Examination of attached Calculating and Indicating Mechanisms. (In addition to the above fees.)	1	0	0	2	0	0
4. Measuring Instruments:—						
(*a*) Measurement of Length or Dimension	1	0	0	2	0	0
(*b*) Measurement of Capacity:—						
1 gallon and under . . .	1	0	0	2	0	0
Above 1 gallon but not exceeding 20 gallons . . .	1	0	0	3	0	0
(*c*) Other Measuring Instruments .	1	0	0	3	0	0
(*d*) Examination of attached Calculating Mechanisms. (In addition to the above fees.)	1	0	0	2	0	0

5. *Re-examination*:—

(1) Where the principle of construction of a pattern has been duly certified, but such pattern is subsequently altered in a manner affecting such principle *in detail only*, and is then submitted for re-examination, the amount of the fee then payable shall be the same as the fee paid on its original *preliminary* examination.

(2) Where the pattern has been wholly altered in its principle of construction the fee payable on re-examination shall be the higher fee prescribed for final examination and testing.

Any question whether the alteration is such as to fall within the foregoing paragraphs (1) or (2) shall be determined by the Board of Trade.

NOTE.—When a pattern or instrument is examined *in situ* on the premises of the manufacturer or dealer, or at the request of a Local Authority, or otherwise, then, in addition to the above fees, a fee will be payable to include the travelling expenses of the Board of Trade Officer.

FRANCIS J. S. HOPWOOD,
Secretary,
Board of Trade.

December, 1904.

LIST OF FEES TO BE TAKEN AT THE STANDARDS OFFICE ON AND AFTER THE 1ST JANUARY, 1892.

	£.	s.	d.
(1) *Primary Standards:*			
For Indian, Colonial, or Foreign Governments, each	20	0	0
(2) *Secondary Standards:*			
For Indian, Colonial, or Foreign Governments, each set of weights or measures	2	10	0
Each separate weight or measure	0	10	0
(3) *Scientific Standards:*			
Weights, each	0	5	0
Measures of capacity, each	0	10	0
Measures of length	1	0	0
Measures of volume	1	0	0
(4) *Standards for other purposes:*			
Weights, each	0	1	0
Measures of capacity, each	0	2	6
Measures of length, each	0	2	6
Measures of volume, each	0	5	0
(5) *Weights and Measures, weighing or measuring instruments for ordinary use:*			
For any denomination of weight or measure required for use in trade or for manufacturing purposes. } The same fees as those given, *ante*, p. 231.			
For weighing and measuring instruments	0	5	0
(6) Testing weights, etc., in disputed cases, each	0	5	0
(7) *Examination of Inspectors:*			
On examination	1	10	0
On examination, *ex-officio* Inspectors (Ireland)	0	0	6

(8) *Miscellaneous:*	£	s.	d.
Examination of public and mural standards submitted by local authorities, or of instrumental equipment of inspector's offices . . .	5	5	0
Petroleum testing apparatus	0	5	0
Standard weights for coins, *ante*, p. 166.			
Photometers (complete)	2	15	0
Photometer scale, or measure of length . .	1	0	0
Photometer burner	0	10	0
Photometer, other measures and fittings . .	0	10	0
Photometer, weights and weighing instruments .	0	5	0
Photometer, gas-meter, measure of capacity . .	0	10	0
For examination of scale-beams, each . . .	0	5	0
For examination of vernier and comparator, each .	0	2	0
For examination of grain weights, each set . .	0	5	0
For examination of hopper and strike, each . .	0	5	0
For examination of verifying gauge for measures of capacity, each	0	2	6
For examination of glass pipettes (grains), each set . . , ...	0	5	0

Standards Department, Board of Trade,
6 & 7, Old Palace Yard, Westminster, S.W.

STATUTORY RULES AND ORDERS, 1907.

[No. 1017.]

Tables defining the amount of error to be tolerated in local standards when verified or re-verified, made by Order in Council dated the 21st day of December, 1907.

I.—Imperial Weights and Measures.

Local Standard Measures of Length.

Denomination.	Amount of error tolerated in excess or in deficiency.
Length :—	
Above 10 feet	0·1 inch.
„ 3 feet and not exceeding 10 feet . .	0·02 „
„ 1 inch „ „ 3 „ . .	0·01 „
Not exceeding 1 inch	0·001 „
Gauges :—	
External :—	
Above 2 inches	0·00010 inch.
Not exceeding 2 inches	0·00005 „
Plugs for testing wire gauges	0·00010 „
Internal :—	
Above 2 inches	0·00015 „
Not exceeding 2 inches	0·00010 „
Notches for testing wire gauges	0·00050 „

Local Standard Measures of Capacity.

Denomination.	Amount of error tolerated in excess or in deficiency. Grains weight of water as measured by a graduated glass tube.
Measures of Capacity:—	
Above 24 gallons	1024 grains.
,, 16 gallons and not exceeding 24 gallons .	768 ,,
,, bushel or 8 gallons and not exceeding 16 gallons	512 ,,
,, 6 gallons and not exceeding bushel or 8 gallons	256 ,,
,, half-bushel or 4 gallons and not exceeding 6 gallons	192 ,,
,, peck or 2 gallons and not exceeding half-bushel or 4 gallons	128 ,,
,, gallon and not exceeding peck or 2 gallons	64 ,,
,, half-gallon and not exceeding gallon . .	32 ,,
,, quart and not exceeding half-gallon . .	16 ,,
,, pint ,, ,, quart . . .	12 ,,
,, gill ,, ,, pint . . .	8 ,,
Not exceeding gill	4 ,,
Apothecaries' Measures:—	
Above 20 fluid ounces	12 ,,
,, 5 fl. oz. and not exceeding 20 fl. oz. . .	8 ,,
,, 4 ,, ,, ,, 5 ,, . .	6 ,,
,, 2 ,, ,, ,, 4 ,, . .	4 ,,
,, 2 fl. drachms and not exceeding 2 fl. oz. .	3 ,,
,, 60 minims or 1 fl. drachm and not exceeding 2 fl. drachms	2 ,,
,, 30 minims and not exceeding 60 minims or 1 fl. drachm	1 grain.
Not exceeding 30 minims	½ ,,

Local Standard Weights.

Denomination.	Amount of error tolerated in excess. / Half the amount tolerated in deficiency.
Avoirdupois Weights :—	
Above 56 lb.	5 grains.
„ 28 „ and not exceeding 56 lb.	4 „
„ 14 „ „ „ 28 „	3 „
„ 2 „ „ „ 14 „	2 „
„ 1 „ „ „ 2 „	1 grain.
„ 8 oz. „ „ 1 „	0·5 „
„ 2 „ „ „ 8 oz.	0·2 „
„ 8 drams „ „ 2 „	0·1 „
„ 1 dram „ „ 8 drams	0·05 „
½ dram and not exceeding 1 dram	0·02 „
Troy Weights :—	
Above 200 oz.	3 grains.
„ 50 „ and not exceeding 200 oz.	2 „
„ 30 „ „ „ 50 „	1 grain.
„ 10 „ „ „ 30 „	0·5 „
„ 2 „ „ „ 10 „	0·2 „
„ 0·5 „ „ „ 2 „	0·1 „
„ 0·1 „ „ „ 0·5 „	0·05 „
„ 0·01 „ „ „ 0·1 „	0·02 „
„ 0·005 „ „ „ 0·01 „	0·01 „
„ 0·002 „ „ „ 0·005 „	0·005 „
Not exceeding 0·002 oz.	0·003 „
Grain Weights :—	
Above 1000 grains	0·2 „
„ 240 „ and not exceeding 1000 grains	0·1 „
„ 40 „ „ „ 240 „	0·05 „
„ 5 „ „ „ 40 „	0·02 „
„ 3 „ „ „ 5 „	0·01 „
„ 1 grain „ „ 3 „	0·005 „
„ 0·3 „ „ „ 1 grain	0·003 „
„ 0·05 „ „ „ 0·3 „	0·001 „
Not exceeding 0·05 grain	0·0003 „
Apothecaries' Weights :—	
Above 2 oz.	0·2 „
„ 4 drachms and not exceeding 2 oz.	0·1 „
„ 2 scruples „ „ 4 drachms	0·05 „
„ 5 grains „ „ 2 scruples	0·02 „
„ 3 „ „ „ 5 grains	0·01 „
„ 1 grain „ „ 3 „	0·005 „
Not exceeding 1 grain	0·003 „

II.—Metric Weights and Measures.

Local Standard Measures of Length.

Denomination.	Amount of error tolerated in excess or in deficiency.
Above double metre or 2 metres.	2·5 millimetres.
,, metre and not exceeding double metre or 2 metres	0·5 millimetre.
,, decimetre and not exceeding metre or 1000 millimetres	0·25 ,,
,, centimetre and not exceeding decimetre or 0·1 metre	0·1 ,,
,, millimetre and not exceeding centimetre or 0·01 metre	0·05 ,,
Not exceeding millimetre or 0·001 metre . . .	0·01 ,,

Local Standard Measures of Capacity.

Denomination.	Amount of error tolerated in excess or in deficiency. Grammes weight of water as measured by a graduated glass tube.
Above 10 litres (dekalitre)	10 grammes.
,, 5 ,, and not exceeding 10 litres (dekalitre)	5 ,,
,, 2 ,, ,, ,, 5 litres . .	2·5 ,,
,, 1 litre ,, ,, 2 ,, . .	1 gramme.
,, 0·1 litre (decilitre) and not exceeding 1 litre .	0·5 ,,
,, 0·02 ,, and not exceeding 0·1 litre (decilitre)	0·3 ,,
,, 0·005 ,, ,, ,, 0·02 ,, . .	0·2 ,,
,, 0·002 ,, ,, ,, 0·005 ,, . .	0·1 ,,
Not exceeding 0·002 litre	0·05 ,,

Local Standard Cubic Measures.

Denomination.	Amount of error tolerated in excess or in deficiency. Grammes weight of water as measured by a graduated glass tube.
Above 100 cubic centimetres	0·5 gramme.
„ 20 „ „ and not exceeding 100 cubic centimetres .	0·3 „
„ 5 „ „ and not exceeding 20 cubic centimetres .	0·2 „
„ 2 „ „ and not exceeding 5 cubic centimetres .	0·1 „
Not exceeding 2 cubic centimetres	0·05 „

Local Standard Weights.

Denomination.	Amount of error tolerated in excess. Half the amount tolerated in deficiency.
Above 5 kilograms	200 milligrams.
„ 1 kilogram and not exceeding 5 kilograms .	130 „
„ 200 grammes „ „ 1 kilogram .	30 „
„ 50 „ „ „ 200 grammes .	13 „
„ 10 „ „ „ 50 „ .	6 „
„ 2 „ „ „ 10 „ .	3 „
„ 5 decigrams „ „ 2 „ .	1 milligram
„ 2 „ „ „ 5 decigrams .	0·7 „
„ 5 centigrams „ „ 2 „ .	0·3 „
„ 2 „ „ „ 5 centigrams	0·2 „
„ 5 milligrams „ „ 2 „	0·06 „
Not exceeding 5 milligrams	0·02 „

III.—Local Standard Gas Measures.

Denomination.	Amount of error tolerated.
Gasholders .	$\frac{1}{4}$ or 0·25 per centum *in excess or in deficiency.*
Test gas-meters .	$\frac{1}{4}$ or 0·25 per centum *fast or slow.*

FORMS.

These forms are given as used in London. The necessary alterations to be made to suit other places.

INFORMATION.

_____ *Division*

of the County of London.

BE IT REMEMBERED—That on the day of in the year of Our Lord One Thousand Nine Hundred and [*insert name of inspector*] Inspector of Weights and Measures, duly authorized and appointed by the [*London County Council*] the Local Authority under the Weights and Measures Acts for the said County, complains to the undersigned, one of His Majesty's Justices of the Peace in and for the said County, that the several persons whose names are set out in the Schedule hereunder written are persons who have been found offending against the provisions of the Acts relating to Weights and Measures, in the manner described and set forth against their respective names in the said Schedule. Wherefore the said Inspector prays that the said several persons may respectively be summoned to appear before two of His Majesty's Justices of the Peace, to show cause why they should not be convicted in the penalty or penalties provided in such Acts, with regard to the several offences alleged against them.

Date of Offence, 190 .	Offender's Name.	Trade.	Place where Offence Committed.	Description of Offence.

Made and exhibited before me, one of His Majesty's Justices of the Peace for the County of London, this day of 190 .

SUMMONS UNDER WEIGHTS AND MEASURES ACTS.

[*Petty Sessional Division.*]

County of London to wit.

To [*name of person summoned*] of [*address of person summoned*].

WHEREAS information hath this day been laid before the undersigned, one of His Majesty's Justices of the Peace in and for the said County of LONDON, by [*name of inspector*] Inspector of Weights and Measures

for the County of London, that you, on the day of did at [*place where offence was committed*] in the said County, unlawfully [*here set out the offence following the words of the statute, as for instance*—" have in your possession a weight, to wit, a weight of which was false or unjust," *and similarly in other cases*].

These are therefore to command you, in His Majesty's Name, to be and appear on the day of at o'clock in the noon, at the Court of Summary Jurisdiction to be held at in the said County, before such Justices of the Peace of the said County as may be then there, to answer to the said Information, and to be further dealt with according to Law.

Given under my Hand and Seal this day of in the year of our Lord, One Thousand Nine Hundred and at in the County aforesaid.

SUMMONS TO POLICE COURT.

[*Name of the Police Court.*]

To [*name of offender*] of [*address of offender*].

Metropolitan Police District to wit.

WHEREAS Complaint hath this day been made before the undersigned, one of the Magistrates of the Police Courts of the Metropolis, sitting at the Police Court, in the County of London, and within the Metropolitan Police District, by [*name of inspector*] Inspector of Weights and Measures for the County of London, that you, on the day of , in the said County of London, and within the Metropolitan Police District, had in your possession for use for trade [*enumerate the instruments, weights or measures in question*] which were false or unjust.*

These are, therefore, to command you, in His Majesty's Name, to be and appear on the day of in the year of our Lord One Thousand Hundred and at o'clock in the noon, at the Police Court aforesaid, before me, or such Magistrate of the said Police Courts as may then be there, to answer to the said complaint and to be further dealt with according to law.

Given under my Hand and Seal this day of in the year of our Lord, One Thousand Hundred and at the Police Court aforesaid.

* For illustrations see "The Inspectors' Pocket Directory," by Howard Cunliffe, pp. 228–231.

WARRANT OF COMMITMENT.

UNDER WEIGHTS AND MEASURES ACTS, 1889 (SECT. 4), AND 1904 (SECT. 13).

DIVISION.

County of London to wit.

To each and all of the Constables of the Metropolitan Police Force, and to the Governor of His Majesty's Prison at in the County of London.

WHEREAS [*name of defendant*] of [*address of defendant*] in the County of [hereinafter call the Defendant] has been this day of 190 , before the Court of Summary Jurisdiction sitting at in the County of London, convicted for that he on the day of One thousand Nine Hundred and in the said County, did unlawfully [*particulars of offence for which he was convicted*] contrary to the Weights and Measures Acts.

And it appearing to the Court that such offence was committed with intent to defraud It is Ordered that the defendant be imprisoned in His Majesty's prison at aforesaid with [or without] hard labour for the space of days.

And it was further adjudged that the said defendant for the said offence should forfeit the said [*particulars of articles liable to forfeiture*] and should also forfeit and pay the sum of [*penalty*] as a fine forthwith, and that in default of payment the said sum be levied by distress and sale of the Defendant's goods, and in default of sufficient distress that the Defendant be imprisoned in His Majesty's Prison at and there kept for the space of days to commence at the expiration of the sentence of days passed upon him for an intent to defraud at the same Court of Summary Jurisdiction unless the said sum be sooner paid.

Now, you, the said Constables are hereby commanded to take the Defendant and convey him to the said prison, and there deliver him to the Governor thereof, together with this warrant, and you, the Governor of the said prison, to receive the Defendant into your custody and keep him with [or without] hard labour for the space of days.

Dated this day of One Thousand Nine Hundred and .

INFORMATION UNDER THE LONDON BREAD ACT.

County of London to wit.

BE IT REMEMBERED that on the day of one thousand nine hundred and [*name of inspector*] of [*address of inspector*] in the said County informeth me [*name of justice*] one of His Majesty's Justices of the Peace or Magistrates for the said County that [*name of offender*] of [*address of*

offender] in the said County [*here set out the offence following the words of the section in question*] contrary to the Statute made in the Third Year of the Reign of King George the Fourth, intituled An Act to repeal the Acts now in force relating to Bread to be sold in the City of London and the Liberties thereof, and within the Weekly Bills of Mortality and Ten Miles of the Royal Exchange, and to provide other Regulations for the Making and Sale of Bread, and preventing the Adulteration of Meal, Flour and Bread within the limits aforesaid, which hath imposed a Forfeiture of [*insert penalty*] for the said offence.

Taken the day of 190 , before me }

SUMMONS UNDER LONDON BREAD ACT.

To [*name of offender*] of [*address of offender*].

WHEREAS complaint and information hath been made before me [*name of justice*] one of Her Majesty's Justices of the Peace or Magistrates for the said County of London by [*name of informant*] of [*address of informant*] That [*particulars of the charge made*].

These are therefore to require you personally to appear before me or such other Justice or Magistrate as shall be then and there present at in the said County of London on the day of next at the hour of in the noon to answer to the said complaint and information made by the said who is likewise directed to be then and there present to make good the same. Herein fail not.

County of London to wit.

Given under my hand this day of one thousand nine hundred

ADDENDA.

[*In note to sect.* 21 *of the Act of* 1889, ante, p. 220.]

Twelve tons of coal were sold to a purchaser, and were delivered in sacks, each sack bearing a metal label stating that it contained 1 cwt. The coal was delivered by cart on different days, and with the first delivery a ticket was handed to the purchaser stating that he was to receive 12 tons of coal in 240 sacks, each sack containing 112 lbs. No further ticket was delivered with the second or subsequent deliveries.—*Held*, that as the delivery was by sacks, each sack containing a specified weight of coal, sect. 21 did not require a ticket to be given with each delivery, and the ticket given on the first delivery was a sufficient compliance with the section: *Kyle* v. *Dunsdon*, 1908, 2 K. B. 293; 24 T. L. R. 505.

[*In note to sect.* 29 *of the Act of* 1889, ante, p. 226.]

A carman in the employment of coal merchants took out in a cart two tons of coal in sacks from his employers' yard for delivery to a purchaser. Each sack was labelled "1 cwt." He was stopped by an inspector, who weighed the 14 sacks that were undelivered, each of which was of short weight, amounting to 51 lbs. in all. The carman received the coal from the yard ready loaded, and he did not know that there was any short weight.—*Held*, that the carman merely took the coal for delivery to a purchaser and not for sale, and he could not be convicted under sect. 29 of the Act of 1889: *Paul* v. *Hargreaves*, 1908, 2 K. B. 289; 24 T. L. R. 501.

[*In note to sect.* 4 *of the Bread Acts*, ante, p. 332.]

A purchaser, as agent and on behalf of an inspector, entered a shop and asked for "a loaf of bread." A cottage loaf was handed to her, and 2½*d.* paid for it, the usual price of a half-quartern loaf. The inspector then entered the shop and weighed the loaf, which was 1½ oz. under 2 lbs. It was proved that the loaf had been taken from the oven and weighed twelve hours earlier. It then weighed 2 lbs., and was placed on one side for private use, and not for sale. The 1½ oz. was lost through evaporation.—*Held*, that it was not necessary in every case that the weighing take place at the time of sale, but if it take place earlier it must have reference to the sale, that this weighing had no reference to the sale, and that there should have been a conviction for selling otherwise than by weight: *Mattinson* v. *Binley*, Times, 27th May, 1908.

An agent of an inspector entered a shop and asked for a 3*d.* best cottage loaf. She was handed a loaf which had round it a paper band printed with the words "Blackledge's Fancy Bread, 3*d.* and 1½*d.* per loaf (2*d.* per lb.), always overweight, varying according to fluctuations in the price of flour." No weighing took place at the time of sale. Immediately afterwards the inspector weighed the loaf on the shop scales; it was 1 lb. 11¾ ozs. The manager said "It was an oversight; the loaf ought to have been weighed." The course of business (in this case followed) was to weigh loaves at the shop, to put the band on each loaf that exceeded 1½ lbs.—*Held*, that there was a sale by weight. The Lord Chief Justice, in giving judgment, said: "At the price charged—2*d.* per lb.—the loaf delivered ought to have been at least 1 lb. 8 ozs. . . . The Act was not meant to prevent people getting a few extra ounces; it was intended to prevent them getting less than the proper weight." The conviction was quashed: *Blackledge & Sons, Ltd.* v. *Bolshaw*, Times, 3rd June, 1908.

INDEX.

Abbreviations: R. = Regulation of Board of Trade; I. = Instruction of Board of Trade to Inspectors; T. = Table.

ABSOLUTE TEMPERATURE, 108

ACCELERATING INSTRUMENT, 20
  testing, 53
  on level plane, 54

ACCELERATION, definition of, 2
  measures force, 3

ACCESSORIES, punishment of, 393
  to offences in markets, 369

ACCURACY, weighing with great, 36–38
  of appliances decided by Board of Trade, 129, 244

ACRE, definition of, 147

ACTION, against public authorities, 180
  tender of amends, 180
  to recover fees, 171

ADHESION, what is, 111

ADJUSTING APPARATUS, 68, 74, 154
  form of, 75, 76, 88

ADJUSTING by inspector, 133, 214, 215
  holes, (R. 57, 58) 270, (I. 53) 322
    on beam scales, (R. 78) 276
    on counter machines, (R. 86) 278
    on crane machines, (R. 127) 289
    on platform machines, (R. 118) 286
  scales, 46
  weight, not counterfeiting, 163

AIR, expansion of, 104, 108
floating power of, 1, 6, 110, 115
pressure of, 97
volume of, 98
weighing in, 110, 115

AIR THERMOMETER, 105

ALCOHOL THERMOMETER, 105

ALTERATION for adjustment, 163
of market stamp (Ireland), 390, 391
of stamped weights, etc., 163

AMENDS, tender of, 180

ANEROID BAROMETER, 99

APOTHECARIES' MEASURES, standards, 199
See MEASURES.

APOTHECARIES' WEIGHT, sale by, 151
denomination of standards, 201

APPEALS, from conviction, 180
in Ireland, 194
in Scotland, 186

APPOINTMENT of inspectors : *see* INSPECTORS.

ARCHIMEDES' PRINCIPLE, 108–110

ARE, definition and extent of, 121

ATMOSPHERE, pressure or weight of the, 98
standard pressure, 99

ATTRACTION of the earth, 2, 3

AUTOMATIC MACHINES, 90–95
calculating price, 90
gravity machine, 94
testing, (R. 133–136) 290, (I. 63) 325
water balance, 91

AVOIRDUPOIS WEIGHT, definition of, 148
denominations of, 200, 326, 327
metric equivalents, 206
sale by, 151
See STANDARDS ; WEIGHTS.

BAGS for hops : *see* HOPS.

BALANCE BALL : *see* WEIGH-BRIDGE.

BALANCES, conditions for accuracy, 38–42
French, 55
friction, effect of, 41
fulcrum and bearings, 33–36
inverted, 52
principle of, 18–29
Quintenz, 58
rider, use of, 41
sensitiveness of, 26, 27, 34
stability of, 29, 32
stamping delicate, 138
theory of, 29
unjust, definition of, 39, 153–156
vibrating, action of, 24–29
with fixed pans, 17, 43
testing of, 53
See ROBERVAL BALANCE ; SCALES ; *also* REGULATIONS ; INSTRUCTIONS.

BAROMETER, principle of, 99
aneroid, 99
mercury, 99
water, 99

BEER, barrels, sale in, 152, 161
stamping of, 137, 161
fraudulent invoice, 381
sale of, by the blue, 363
by the glass, 150
by the litre, 364
in stamped measures, 363

BERENGER'S PRINCIPLE, 55
in French balance, 66
in weigh-bridge, 71

BLOOD HEAT, definition of, 101

BLUE, sale of beer by the, 363

BOARD OF AGRICULTURE,
powers of, in markets and fairs, 371–375

BOARD OF TRADE, duties and powers of, 126–130, 163–166
opinion as to casks, 161
power to decide disputes, 129, 244
to hold local inquiry, 129, 213
examinations, 130, 245
to take fees, 129, 213
to test patterns, 129, 243
to make general regulations, 128, 240
See REGULATIONS.
standards, 127, 144, 145
list of, 198–201
verification of, 127, 164, 211

BOILING POINT, definition of, 100

BORDA'S mode of weighing, 38

BOROUGH, definition of, 208
may or may not be local authority, 175
relief from county expenses, 176, 238

BOX MACHINES, 55

BRAND, frauds in Irish market, 390-392

BRASS GALLON, the standard, 199

BRASS WEIGHTS, use of, 110

BREAD, sale of, 227, 331–339
by weight only, 332. *See* ADDENDUM, p. 406.
loaves of any size, 331
sale by price, 333
checking is "trade," 161
disqualification of justice, 337, 338
fancy, 332, 333
obstruction of officials, 338
penalties, application of, 338, 339
prosecutions, limitation of, 339
forms of information, etc., 404
refusing to weigh, 227, 337
scales to be provided, 247, 335
to be carried in carts, 336
servants, remedy of employee against, 337
use of imperial standards, 334
Ireland:
application of Acts to, 331–339
sale not by measure, 334

BREAD—*continued.*
Scotland:
deficiency in weight, 350
marking bread, 350
police may weigh, 350

BREWERY, weighing appliances in, 352

BULK, sale by, 137, 150

BURGH, defined, 186

BUSHEL, definition of, 148
See MEASURES; STANDARDS.

BUTTER, increasing weight of (Ireland), 391, 392

BYE-LAWS, penalties for breach of, 132
power to make, 132, 223
publication of, 132, 224
regulating the sale of coal, 125, 132, 223

CANNEL, sale by weight in London, 340

CANTEENS, inspecting, 139

CAPACITY, stamping measures of: *see* STAMPING.
standards of, 148, 199, 326
in metric system, 124, 202, 204, 327

CAPILLARITY, definition of, 112

CARAT, sale by, is it legal? 151

CARTS: *see* COAL, sale of, *and* MARKETS.

CASED WEIGHTS, allowance for, (R. 52) 268

CASES, application of, 139

CASKS, frauds as to (Ireland), 390–393
sale in, 152
when to be stamped, 137, 152, 161

CATTLE, weighing of, 370–376
See MARKETS.

CENTAL, 200

CENTIARE, British equivalent, 121
definition and extent of, 121
See METRIC MEASURES; STANDARDS.

CENTIGRADE SCALE, description of, 101

CENTIGRAM, British equivalent, 123, 204
definition and weight of, 118, 203, 204
See METRIC STANDARDS.

CENTILITRE, British equivalent, 124, 204
definition and volume of, 118, 124, 202
See METRIC STANDARDS.

CENTIMETRE, British equivalent, 203
definition and length of, 118, 121, 202
See METRIC STANDARDS.

CENTRE OF GRAVITY, definition of, 7, 16
distinguished from centre of load, 24
how found, 7

CENTRE OF LOAD, 24

CHAIN, definition of, 147

CHALDRON, definition of, 148

CHEMISTS' BALANCES, testing, 138

CHURNS, for use for trade, 157
testing, (I. 43) 319
used as measures, 137

CINDERS, sale by weight in London, 340

CIVIL REMEDY, saving for, 227, 228

CLERK OF MARKETS, duties of, 209, 210
See MARKETS.

COAL MINES, application of Acts to, 329, 330

COAL, sale of, 218
generally (*excluding Scotland*), 140–142
by weight only, 160, 218
bye-laws regulating the, 132, 223
cart, frauds by drivers, 141, 221
correct weight, 220
weight marked on, 141, 220
delivery, deficiency on, 141, 220, 221
ticket on, 141, 219, 235
what constitutes, 220
entry, power of, 141, 225

COAL—*continued.*
generally (*excluding Scotland*)—*continued.*
false representations, 141, 225
by contractor, label, servant, 225, 226, 404
fees for weighing, 223
frauds by drivers, 141, 221
fraudulent weighing, 141, 222
in bulk, weight of vehicle, 220
inspectors' powers of entry, 141, 225
weighing, 141, 221–223
obstruction of inspector, 225
of weighing, 223
over two hundredweight, 219, 220
refusing to deliver ticket, 141, 219
short weight, 141, 219–221, 225
ticket on delivery, 141, 219, 235, 404
weight of vehicle, 141, 220
under two hundredweight, 221
vehicle, weight of, 141, 220
weighing, by inspector, 141, 222, 225
by seller, 141, 221, 222
bye-laws may be made as to, 224
cost of, 223
fees for, 224
may be required, 141, 222
obstruction of, 223
who may compel, 222, 223
weighing instruments, 132
carrying of, 223
erection of, 132, 222
maintenance of, 222
London (additional provisions), 340–347
by weight, 340
"coal" includes coke, etc., 340
delivery in bulk or sacks, 340, 341
deficiency in, 341, 343
false description, 340
frauds by drivers, 341–343
fraudulent selling, 340
obstruction of purchaser, 343
recovery of penalties, 344
refusing to weigh, 343
short weight, 341, 343
tickets to purchaser, 345
weighing at purchaser's request, 341–344
by carman or carrier, 341, 342

COAL—*continued.*
London—continued.
procedure on, 342–344
under five hundredweight, 344
weighing machines—
at police stations, 344
on carts, 342
what are proper, 342
on wharfs, 341
Scotland, 346–352
by weight only, 140, 218, 227
frauds and fraudulent weighing, 348, 349
in bags or boxes, 348
to be labelled, 348
ticket to buyer, 348
weighing at buyer's request, 346
by retailers, 347
powers of police, 347
weighing machines, erection of, 346
dealers to provide, 347

COEFFICIENT OF EXPANSION, definition of, 103
for gases, 104

COIN WEIGHTS, definition of, 166, 184
denominations of, 201
standards for, 145
stamping by Board of Trade, 162, 166, (I. 51) 321
fees for, 166
Order in Council, 9 August, 1870...201

"COKE," in London, "Coal" includes, 340

COMBINATION of local authorities, 131, 176

CONCAVE MENISCUS, 111

CONSTRUCTION of Acts, 139
repealed Acts, 182
of Regulations, 139, 241, 242, 251

CONTRACTS, by imperial weights or measures, 149
void, if unstamped measures be used, 160
in Ireland, 187
by metric standards, 152, 239

CONVEX MENISCUS, 111, 112

CONVICTION, publication of, 216
for second offence within five years, 179

COPIES of imperial standards, 144

COSTS of inquiry by Board of Trade, 214
on determining disputes, 244, 245
of weighing coal, 223
under Merchandise Marks Act, 387
See EXPENSES.

COUNTER MACHINES,
with double beam, 51
See ROBERVAL BALANCE.

COUNTERFEITING stamp : *see* FORGERY.

COUNTY, definition of, 208

COUNTY COUNCILS, powers transferred to, 130, 175
(Scotland), 130, 377
(Ireland), 130, 187, 208
See also LOCAL AUTHORITIES.

COUPLE, definition of, 16, 17

COURT FEES, 178

COURT of Summary Jurisdiction in Ireland, 194

CRAN, a legal measure in Scotland, 151, 389

CROPS, contracts as to (Ireland), 187

CROWN, weight of, 201

CUBIC METRE, volume of, 204
See METRIC STANDARDS.

CUBICAL EXPANSION, 103

CULM, sale by weight in London, 340

CUSTOM OF TRADE,
use of paper bags, 158
weighing live pigs, 156

DECIARE, 121

DECIGRAM, British equivalent, 204
definition and weight of, 118, 202
See METRIC STANDARDS.

DECILITRE, British equivalent, 204
definition and volume of, 118, 124, 202
See METRIC MEASURES.

DECIMETRE, British equivalent, 203
definition and length of, 118, 120, 202

DEDUCTIONS prohibited in Ireland, 188
See REBATE.

DEFICIENCY, in weight: *see* SHORT WEIGHT.

DEKAGRAM, British equivalent, 204
definition and weight of, 117, 123

DEKALITRE, British equivalent, 204
definition and volume of, 117, 124, 202

DEKAMETRE, British equivalent, 204
definition and length of, 117, 120, 202

DEKARE, definition and extent of, 117, 121

DENOMINATION, definition of, 153

DENOMINATIONS, stamping of, 159, 216, (R. 18) 259
new, of standards, 212
of standards, 198–203

DENSITY, 106
measurement of, 107
bodies lighter than water, 108, 109
new denominations of standards of, 212

DIAMONDS, sale by weight, 151

DIMINISHING weights or measures, 162

DISCOUNT: *see* REBATE

DISMISSAL of inspectors, 132

DISPUTES, what, settled by Board of Trade, 129, 134

DISQUALIFICATION of inspector, 133, 214

DISTRICT, power of inspector in combined, 131, 136, 176
of another authority, stamping in, 135

DRACHM, metric equivalent, 206
weight of a, 200

DRAM, definition of, 148
metric equivalent, 205
distinguished from "drachm," 205 (note)
fluid, 190, 205
metric equivalent, 205

DRIVERS, frauds by: *see* MARKETS; COAL

DRUGS, sale by weight, 151

DUBLIN, acceleration at, 2, 5
appointment of inspectors, 136, 192
powers of corporation, 230
provision of local standards, 189

EARTH, attraction of, 3

ELECTRICITY, standards for, 128, 212

ENTRY, by inspectors, 135, 173
as to sale of coal, 225
by justice of the peace, 173
by sheriff in Scotland, 187
into mines, 140, 329
powers of, in Scotland, 187, 350
warrant for, 135, 173

EQUATOR, acceleration at, 2, 3

EQUILIBRIUM, stable, unstable, and neutral, 19, 20

EQUIVALENTS of imperial and metric weights and measures, 203–206

ERROR allowed in local standards, 168
set out, Order in Council, 21 December, 1907...397–401
in brass standard gallon, 199
on verification, 241.
See REGULATIONS.

EVIDENCE of possession, 156, 174, 179
of verification of local standards, 165, 168

EXAMINATION for inspectors, 130, 133, 245, 246
fee for, 214

EXCISE TRADER, duties of, 352, 353

EXEMPTIONS in certain localities, 140
as to sale of coal, 226
of instruments of Public Departments, 138, 139, 157

EX-OFFICIO INSPECTORS: *see* INSPECTORS.

EXPANSION, 102–104
coefficients of, 103
of gases, 104, 107, 108

EXPENSES,
of adjusting market machines, 209
of ex-officio inspectors, 191
of inquiry by Board of Trade, 214
on determining disputes, 244, 245
of local authorities, 177
relief of borough contributions, 238
of publication of convictions, 216
of reweighing coal, 223

FACTORIES, Acts applied to, 330
weighing instruments in, 140

FAHRENHEIT SCALE, description of, 101

FAIRS: *see* MARKETS AND FAIRS.

FALSE BALANCES used for trade, 153
machine for excess luggage, 155
question of fact for the Court, 156
sale of, 159
weigh-bridge requiring adjustment, 154
with interchangeable pans, 159
removable balance ball, 155

FALSE DESCRIPTIONS of weights and measures, 379–383
in Ireland, 390

FEES, application of verification, 213
in Ireland, 218
for adjusting by inspector, 215
for examination of inspector, 214
standards, 396, 397
coin weights, 166
for inspection and verification, 134, 215, 246
Order in Council, 21 December, 1907...231–234
for weighing coal, 223
refunding, 133
for bad work, 171
to Board of Trade, 129, 213

FEES—*continued.*
to constable when inspector, 170
to ex-officio inspectors, 192, 218
under Act of 1904...394–396

FIARS prices, how calculated, 185

FINES, application of, 179
in Ireland, recovery of, 194
in Scotland, 185
See also BREAD, COAL, etc.

FLEECES, increasing weight of (Ireland), 392

FLOATING POWER of air, 110, 115

FLORIN, weight of, 201

FLUID OUNCE, definition of, 205
metric equivalent, 205
standard, 199

FOOT, definition of, 147
metric equivalent, 205

FORCE, definition of, 15
measured by acceleration, 2, 3
of weight, 1

FORFEITURE, application of, 179 ; in Scotland, 185
articles liable to, 136, 220
bearing forged stamp, 136, 162
unauthorized weights or measures, 153
unjust appliances, 153, 154
disposal of, 179, 387
under Merchandise Marks Act, 387
used for fraud, 158, 212
without stamp, 153
false appliances for defrauding revenue, 354
in Scotland, 351

FORGERY of stamp, 136, 162, 211
penalties, 162
removing stamp is, 163, 246, 247
of market stamp (Ireland), 391

FOUNDERS' COMPANY, rights of, 182

FRANCHISES, purchase of, by local authorities, 236

FRAUD by driver: *see* COAL; MARKET.
by machine keepers, 368
custom of trade, 158
imprisonment for, 212
in increasing weight of casks or fleeces (Ireland), 391, 392
in Irish markets, 390
in sale of coal: *see* COAL.
in using weights, etc., 158
in weighing cattle, 372
in Scotland, 348–350
under Merchandise Marks Act, 379, etc.
wilful commission of, 136, 158

FRAUD, FACILITATING PERPETRATION OF.
beer barrels, 161
imprisonment for, 212
instruments, 40, 128, 129, 154–156
certificates for, 243
prohibition of stamping, 240
refusal to stamp, 134
See ACCESSORIES.

FREEZING POINT, definition of, 100

FRENCH BALANCE, description of, 55–58
testing of, 57

FRICTION, definition of, 18
effect of, in balance, 41
on bearings of weigh-bridge, 79

FRINGE, sale by weight of gold, 151

FULCRUM, definition of, 8
in balances, 33–36
reaction of, 16, 35

FURLONG, definition of, 147

GALLON, brass standard, 199
definition of, 148
metric equivalent, 205

GALLOWS for beam scales, 22

GAS expansion, 104, 108; pressure, 97; volume, 98
holders, saving as to, 182
meters, 182, 216
standards, verification of, 216

GAUGE, false statement as to, 383
standards of, 198
expansion of, 104

GAUSS' method of weighing, 38

GENERAL REGULATIONS,
by Board of Trade, 128, 240
scope of, 129
See REGULATIONS.
local authorities may make special, 128, 241

GENERAL WARRANT for entry, 135, 136, 173

GILL,
one-third of, as a measure, 145, 146, 153
standard, 199
metric equivalent, 205

GLASS, adhesion to, 110, 111
measures, how to read, 111
measures, stamping in, (R. 35–41) 263–265, (I. 44–46) 319
sale by the, 160, 363, 364

GOLD, sale by weight, 151

GRADUATED MEASURES, stamping, (R. 36, 42) 264, 265
testing, 116, (I. 44–46) 319

GRAIN, etc., sale of, in Scotland, 349

GRAIN, definition of a, 148
metric equivalent, 206
weights, 200

GRAM, British equivalent, 123, 204
weight of, 123

GRAND JURY, duties of, in Ireland, 191
transferred to County Council, 187, 191, 208

GRAVITATION, theory of universal, 3, 4
attraction of, 3, 4

GRAVITY, 2, 3
centre of gravity, 7
how found, 8
specific gravity, 105–110
standards for, 107, 212

GUILTY KNOWLEDGE of defendant, 156, 382

HALF-CROWN, weight of, 201

HAY, etc., sale of, in Scotland, 349

HEAPED MEASURE, unlawful, 149

HECTARE, British equivalent, 122, 204
definition and extent of, 121

HECTOGRAM, British equivalent, 204
definition and weight of, 117, 123

HECTOLITRE, British equivalent, 204
definition and volume of, 117, 124

HECTOMETRE, British equivalent, 204
definition and length of, 117, 120

HERRING FISHERY, cran and quarter-cran measures, 151, 389

HINDRANCE: *see* OBSTRUCTION.

HOPS, weight of bags, 354, 355
marking of bags and pockets, 355, 356
alteration of, 358
false marking, 359
recovery of penalties, 361
limitation of action, 362
savings of other remedies, 360
search, power of, 359
weight, marking of, 356, 357

HUNDREDWEIGHT, definition of, 148
metric equivalent, 123, 206
new, or cental, 200

HYDROMETER, description of, 109
testing measures with, 113

ICE, melting point of, 100
specific gravity of, 109

IMPERIAL STANDARDS, 143, 148
description of, 196
metric equivalents of, 205
of capacity, 148
of length, 146
of mass or weight, 6, 147

IMPERIAL STANDARDS—*continued.*
parliamentary copies of, 144, 197
restoration of, 144
See LOCAL STANDARDS *and* STANDARDS.

IMPRISONMENT for fraud, 158, 212
in default of fine (Scotland), 185

INCH, definition of, 147
metric equivalent, 205

INCREASING MEASURES OR WEIGHTS, 162

INFORMER, reward to, 179
exemption of inspector, 248
in Scotland, 185, 186

INLAND REVENUE, offences connected with, 352–354
inspecting appliances for, 139

INQUIRY, local, by Board of Trade, 129, 213

INQUISITION as to rents, tolls, etc., 181

INSPECTION, regulations for, 240
See REGULATIONS.
of local standards, 131, 133
inquiry as to procedure in, 213
See also INSPECTOR.

INSPECTOR, powers and duties of, etc. (generally), 132–140
adjusting by, 133, 214
appointed under repealed Acts, 195
appointment of, 132, 169
in certain towns, 176
in City of Dublin, 136, 192
in County of Dublin, 217, 235
in Ireland, 130, 136, 191
on examination, 245
security required on, 133, 170
recognizance, form of, 394
certificate, 133
coal mines, duties in, 329
coal, powers as to sale of, 140–142
powers as to weighing, 225
combined authorities, acting for, 131, 136, 176
constable, fees for when a, 170
dismissal of, 132, 169
disqualification of, 133, 214

INSPECTOR—*continued.*
district, entry into another's, 135, 171, 247
entry, powers of, 135, 136, 141, 173
into mines, 329
where coal is sold, 225
examination of, 133, 214, 245
ex-officio (Ireland), 136, 191, 217, 218
factories, powers in, 330
fees to constable, 170
for adjusting, 215
for examination, 214
for verification, 215
repayment of, 133, 171
for joint authorities, 131, 136, 176
judgment, using his, 40
London, in City of, 207
in County of, 177, 217
mines, powers as to, 329
misconduct of, 171, 174
breach of Regulations is, 241
obstruction of : *see* OBSTRUCTION.
powers of, as to combined district, 136, 176
entry : *see* ENTRY
in Scotland, 350
sale of coal, 140, 225, 221, 222
seizure of articles, 136, 173
weighing coal, 141, 221, 222
prosecutions by, 131
protection of, from action, 180
recognizance to Crown, 133
regulations for, 132
See REGULATIONS.
repayment of fees by, 133, 171
security required by, 133, 170
seizure, powers as to, 136, 173
verification and stamping by, 134, 170
See STAMPING ; VERIFICATION.
weigh coal, power to, 221, 222
workshops, powers as to, 330

INSTRUCTIONS to Inspectors,* 307–328
General,
appointment—employment of assistant, (2) 307
duties under other Acts—records, (3) 308

* Numbers in brackets are those of the Instructions.

INSTRUCTIONS—*continued.*
General—continued.
Board of Trade notices and reports, (4) 308
books to be kept, (5) 309
recommending makers, etc., (6) 309
professional confidence, (7) 309
gratuities, not to be received, (8) 309
classification of duties, (9) 309
Local Standards and Equipment, 309–312
examination of standards and instruments, (10) 309
comparison of working standards, (11) 310
taking care of and handling standards, (12) 310
outfit of tools, etc., necessary, (13) 310
precautions as to stamps and stencils, (14) 311
verification punches, (15) 311
floor space of office, (16) 311
appliances of local authority, (17) 321
Inspection,
compliance with standards, (18) 312
power of entry, (19) 312
forfeiture of weights and measures, (20) 312, (21) 313
visiting traders, (22) 313
appliances previously stamped, (23) 313
Crown property, (24) 314
nature of offence to be considered, (25) 314
testing weights of parcels, (26) 315
coal, (27) 315
Verification,
statutory duties, (28) 315
weighing instruments, verified at office, (29) 315
verification on premises of trader, (30) 315
comparison with standards, (31) 316
mode of stamping, (32) 316
fees for stamping, (33) 316
detention of articles, (34) 316
appliances facilitating fraud, (35) 316
certified appliances, (36) 317
adjusting by inspectors, (37) 317
Measures of Length, 318
tension of tape, etc., measures, (38) 318
stamping wooden measures, (39) 318
Liquid Measures of Capacity, 318, 319
strength of, (40) 318
tilting to empty, (41) 319
testing by brim standards, (42) 319
rinsing out measures, (43) 319

INSTRUCTIONS—*continued.*
Liquid Measures of Capacity—continued.
testing apothecaries' measures, (44) 319
use of volume plungers, (45) 319
glass metric measures, (46) 319
Dry Measures of Capacity, 320, 321
variations permitted in dimensions, (47) 320
strength, etc., of measures, (48, 40) 320, 318
use of seed, (49) 320
testing by gauges, (50) 320
Weights, 321
corn weights, (51) 321
tapping new weights, (52) 321
lead in weights, (53) 322
mode of testing, (54) 322
Weighing Instruments,
use of adjusted counterpoises, (55) 323
testing hardness of bearings, (56) 323
care during operation, (57) 323
various points to be observed, (58) 323, 324
testing of weigh-bridges, (59) 324
observations of steelyard, (60) 324, 325
large weigh-bridges, (61) 325
crane machines, (62) 325
automatic machines, (63) 325
Denominations of Board of Trade Standards, 326-328

INTERPRETATION : *see* CONSTRUCTION.

INTOXICATING LIQUORS, sale by measure, 363, 364
(Ireland), 365
(Scotland), 364

INVERTED BALANCES, description and testing of, 52
See REGULATIONS.

IRELAND, application of Acts to, 187–195
bread, sale of, 331–339
ex-officio inspectors, 136, 191, 217–218
appointed inspectors, 235
expenses of inspectors, 191
local authorities in, 130, 208, 217, 235
local standards, 189, 190
custody of, 193
copies of, 217
inquiry as to, 189
verification of, 189

IRELAND—*continued.*
mode of weighing in, 188
prevention of frauds, 390
butter, frauds as to, 391–392
counterfeit measures, etc., 391
fleeces, frauds as to, 392
limitation of prosecution, 392
offences as to brands, stamps, etc., 390, 391
penalties, recovery of, 392
savings, 393
tickets, falsifying, 391
weighmaster, to be supplied with scales, etc., 209

IRISH LAND COMMISSION, powers of, in markets and fairs, 371, 373

JUSTICE OF THE PEACE, of the county of London, 178
power of entry, 173

KILOGRAM, British equivalent, 123
definition and weight of, 122
standard, 203

KILOLITRE, definition and volume of, 117, 124

KILOMETRE, British equivalent, 121, 204
definition and length of, 117, 121

KNIFE-EDGES in weighing instrument, 33 *et seq.*
examination of, (R. 67) 273, (I. 56) 323

LABELS, false representation by, 26
false trade description by, 384
on bags, etc., of coal (Scotland), 348

LACE, sale by weight, of gold, 151

LATITUDE, weight varies with, 4

LEAD, specific gravity of, 108

LEET JURY, powers of, 183

LEGAL PROCEEDINGS, 177–181
appeal, 180
disposal of forfeitures, 179
evidence of possession, 179

LEGAL PROCEEDINGS—*continued.*
forms, 401
in Ireland, 194, 392
in Scotland, 185, 351
leet juries, etc., 183
protection of inspectors, etc., 180
prosecution by inspectors, 248
recovery of penalties, 177
rewards to informers, 179
remedies under other Acts, etc., 227, 228
second offences, 179

LENGTH, measures of, 198
standard of, 146 ; in metric system, 118, 203
See MEASURES.

LEVEL, testing scales when, 39
accelerating instruments, 54

LEVER, bent, 15
fulcrum of, 8
inclined, 12, 13
principle of, 8, 12–1
steelyard, 11

LIABILITY of inspector for neglect, 171, 174

LINEAR EXPANSION, 102

LIQUIDS, floating power of, 108
specific gravity of, 109

LITRE, British equivalent, 124, 204
definition and volume of, 124, 202
sale of beer by the, 364
standard, 203

LOAD, centre of, 24
on steelyard of weigh-bridge, 77

LOCAL ACTS, as to sale of coal, 226

LOCAL AUTHORITIES, 130, 175, 207, 376–378
appointment of inspectors by, 131, 132, 169
bye-laws made by, 132, 223
combination of, 131, 176
definition of, 130, 175, 207
erection of coal weighing-machines, 222

LOCAL AUTHORITIES—*continued.*
expenses of, 175
relief of boroughs from contribution, 238
local standards provided by, 130, 166
markets and fairs, powers and duties as to, 365 *et seq.*
powers and duties of, 130–132, 166, etc.
purchase of franchises, 236
working standards provided by, 212

LOCAL CUSTOM: *see* CUSTOM OF TRADE.

LOCAL INQUIRY by Board of Trade, 129, 213

LOCAL MEASURE, when legal, 150

LOCAL RATE, 175, 207
in Ireland, 218

LOCAL STANDARDS, 130, 146, 167–170
aliquot part of, 167
copies of (Ireland), 189, 217
custody of (Ireland), 193
errors allowed in, 168, 397
how provided, 130
Dublin, 189
Ireland, 189
inquiry as to (Ireland), 190
production of, 131, 169
re-verification of, 167
verification of,
by Board of Trade, 121, 165, 167
evidence of, 165
by local comparison, 131, 168
in Ireland, 189

LOCAL SUB-STANDARDS in Ireland, 189, 190
custody of, 193
verification of, 193

LOCAL WEIGHT in Ireland, 187, 188

LONDON, acceleration at, 2, 3
jurisdiction of London County Council, 177, 217
justices of the County of, 178
saving for City of, 183, 217
See COAL, sale of.

LONG PULL, with beer, 363–364

LONG WEIGHT, sale by, 150

MANUFACTURE of false instruments, 159

MANUFACTURER,
- may obtain certificate for appliances, 243
- name, on weighing instruments, (R. 65) 273
- possession by, for sale, 157

MARKETS AND FAIRS, 365–376
- accessories to offences in, 369
- appliances, providing of, 366, 370
  - by owners, 209, 366
  - places for weighing carts, 366
- carts, weighing of, 346, 367
  - drivers refusing to weigh, 367
    - offences by, 367, 368
- cattle, weighing of, 370, 376
  - accommodation for weighing, 370, 374
    - tolls, when not payable, 371
  - auction marts, 375
  - definition of cattle, 370
  - exemption of certain markets, 372, 373
  - Ireland and Scotland, 373, 375
  - returns to Board of Agriculture, 374
  - tolls to be taken, 372
  - weighing may be required, 371
    - refusing to weigh, give ticket, etc., 371
    - fraud in, 372
- inspection by clerk, 210
- offences by clerk, 210
  - as to price lists, 152
    - short weight, 210
  - drivers, 367, 368
  - machine keepers, 368, 369
- offences by purchasers and sellers, 368
- providing scales for, 209, 366
- refusing to weigh, 366
- Scotland, application of Acts, to, 346
- tolls, 371, 372
- weighing, by sellers, 366
  - frauds in, 368

MARKET RETURNS of sale of cattle, 374

MASS, centre of, 7
- definition of, 4
- standard of, British, 5, 6
  - metric, 122, 123

MATTER, proportional to weight, 2, 4
See MASS.

MEASURES,
apothecaries', list of, 199
ascertaining volume of, 113, 115
certificate of suitability, 243
comparison of, 115
containing vessel is not, 152
false stamp, 246, 247
in Ireland, 390
falsity, defendant's knowledge of, 156
fees for stamping, 231
filling of, 149
for use in trade, 148, 198
fraud in use of, 158
heaped, 149
of capacity, 148, 199
of length, 147, 198
of surface, 147
plunger, use of, 113, 114
re-stamping of, 135, 156, 172
when unnecessary, 135, 143
stamping of, 134
with denomination, 159
testing graduated, 113, 116
unstamped, when legal, 153
See REGULATIONS.

MEASURING INSTRUMENT, definition of, 228

MENISCUS, definition, 111
how to read a, 112
removal of, 112

MERCHANDISE MARKS, frauds as to, 379–389
accessories, 386
application of marks, 384, 385
brewers' invoices, 381
costs of defendant, 387
defences, 380, 385, 386
evidence of husband, or wife, 386
exemption of employée, 385
exemptions and savings, 387, 388
false trade description, application of, 379–381.
definition of, 383
selling with, 380

MERCHANDISE MARKS—*continued.*
forfeiture of things sold, 381
disposal of, 387
intention to defraud, 382
Ireland and Scotland, 388
limitation of prosecution, 387

MERCHANT SHIPS, inspection on, 140, 379
weights and measures on, 378

MERCURY, reading level of, 111
weight of, 106

METRE, 118, 203
British equivalent, 121, 204
standard, 203

METRIC MEASURES of area, 121
cubic, 122, 204
Imperial equivalents, 203, 204
of capacity, 124, 202
of length, 118, 202
of mass, 122, 202

METRIC STANDARDS, 119–125
denominations of, 202, 203, 206
new denominations of, 239
verification of, 211, 239
with Board of Trade, 206

METRIC EQUIVALENTS (Order in Council), 203, 204

METRIC SYSTEM AND EQUIVALENTS, 117–125
contracts in, 152
use in trade, 239

MILE, definition of, 147
metric equivalent, 121, 205

MILK CHURNS, stamping of, 137, (R. 33) 263
rinsing out (I. 43), 319

MILLIGRAM, British equivalent, 204
definition and weight of, 118

MILLILITRE, cubic contents of, 205

MILLIMETRE, British equivalent, 203
definition and length of, 118

MILLS, weighing appliances in, 376

MINES, weighing appliances in, 140, 329

MISCONDUCT of inspector, 171, 174
breach of regulations, 241

MOMENT, definition of, 11, 12

MONEY WEIGHT SCALES, 90, 334

MYRIAGRAM, British equivalent, 118, 123
definition and weight of, 123

MYRIAMETRE, definition and length of, 117

NAIL, definition of, 198

NAME of manufacturer on weighing instrument (R. 65), 273

NEUTRAL EQUILIBRIUM, definition of, 19

NUMBER, false statement as to, 383

OBLITERATING stamp, 240, (R. 12) 254–257

OBSTRUCTION,
of excise officer, 353, 354
of inspector, 173
as to coal weighing, 223, 225
as to Bread Acts, 337, 338
of mines by inspector, 330
of purchaser of coal (London), 343
of weighing coal, 223

OLD WEIGHTS AND MEASURES,
before 1878...196
before Regulations, (R. 14) 257, 258

ORDERS IN COUNCIL under Act of 1878...145, 149, 168, 212, 246
how made and published, 181
9 August, 1870 (coin weights), 201
4 February, 1879 (standard "cental"), 200
14 August, 1879 (apothecaries' measures and weights), 199
26 February, 1880 (four bushel standard), 199, 201
28 April, 1880 (five gallon standard), 198
18 May, 1881 (denominating new standards), 198

ORDERS IN COUNCIL—*continued.*
26 August, 1881 (Whitworth gauges), 198
23 August, 1883 (Whitworth wire gauges), 198
28 November, 1889 (standard gallon measures, 6–31), 199
1 May, 1890 (Nottingham, sale of coal), 226
22 November, 1890 (three gallon standard), 199
19 May, 1898 (metric standards), 149, 202
19 May, 1898 (metric equivalents), 203
9 October, 1903 (standard half-cental), 200
12 December, 1904 (standard 20 metre), 202
11 May, 1906 (20, 10, and 5-lb. standards), 200
16 November, 1906 (new measures of length), 198
21 December, 1907 (fees for verification), 231
21 December, 1907 (errors in local standards), 397

OUNCE, definition of, 148
metric equivalent, 206
fluid, 199
metric equivalent, 205

OUNCE, TROY, definition of, 146
metric equivalent, 206

PAIR OF SCALES: *see* SCALES.

PANS fixed on balances, 17, 43
interchangeable, 40, 159
See ROBERVAL BALANCE.

PARCELS, weighing, in Scotland, 351

PARIS, acceleration at, 2

PARLIAMENTARY COPIES of standards, 126, 144
description of, 197
restoration of, 144

PATTERNS of appliances allowed, 134, 243

PECK, definition of, 148
metric equivalent, 205

PENALTY, recovery of, 177
in Ireland, 194
enforcement of (Scotland), 185
for accessories, 393
See under various heads, ALTERATION; BYE-LAWS, etc.

PENNY, weight of, 201

PENNYWEIGHT, standards, 327
metric equivalent, 206

PERCH, definition of, 147

PERSON, includes corporation, 184

PINT, definition of, 148
metric equivalent, 205
standard, 199

PIPETTE, use in testing measures, 116

PLATFORM MACHINES: *see* WEIGH-BRIDGES.

PLATINUM, sale by Troy weight, 151

PLUGS for stamps (R. 19), 259

PLUNGER, for testing measures, 113, 114

POCKETS for hops: *see* HOPS.

POLE, definition of, 147

POSSESSION, evidence as to, 174, 179
by servant, 156
of false market stamp (Ireland), 391
of unauthorized weights or measures, 153
of unstamped weighing instrument, 211

POST-OFFICE SCALES, 139, 157

POUND, imperial standard, 143, 147, 196
metric equivalent, 206
standard of mass, 5, 6

POWERS of Corporation of Dublin, 230
of inspector, etc.: *see* INSPECTOR, etc.

PRECIOUS METALS and STONES, sale by Troy weight, 151

PRESSURE of air or gas, 97, 98
standards for, 212
standard atmospheric, 99

PREVENTION of frauds (Ireland), 390–393

PRICE, sale by, 137, 153

PRICE LISTS, to be in imperial standards, 152

PRISONS, inspecting in, 139

PROCEDURE : *see* LEGAL PROCEEDINGS.

PRODUCTION of local standards, 170

PROHIBITION of stamping, 240
where certificate is refused, 243
in Model Regulations, 284

PROOF of exemptions, 178
of possession, 179

PROSECUTION : *see* LEGAL PROCEEDINGS.

PUBLIC AUTHORITIES PROTECTION ACT, 181

PUBLIC DEPARTMENT, instruments belonging to, 139, 157

PUBLICATION of bye-laws, 132, 224
of conviction, 216
of Orders in Council, 181

PUMPING of steelyards, 66

PURCHASER'S KNOWLEDGE of custom of trade, 158
use of coalbarrow, 155

QUANTITY, false statement as to, 383

QUART, definition of, 148
metric equivalent, 205

QUARTER, definition of, 148
metric equivalent, 206

QUARTER SESSIONS, what are, 184

QUARTERN LOAF, 332

QUINTAL, weight of, 123
British equivalent, 204

QUINTENZ BALANCE, description of, 58

REACTION and weight, 16

REAUMUR SCALE, description of, 102

REBATE on stamping, 134, 215, 248

RECOGNIZANCE, form of, 394
on appointment of inspector, 133, 170

REFUSAL to stamp, 134

REGULATIONS OF BOARD OF TRADE *
subjects of regulations, 128, 240
effect of, as in Act, 241
in Ireland, 242
refusal to comply with, 241
GENERAL, 251–260
interpretation of, (3) 251
notification of appointment of inspector, (4) 251
local standards to be approved, (5) 251
equipment of inspector,
working standards, (6) 252
stamping appliances, etc., (7) 253
suitable premises, (8) 253
number of visits, (9) 253
reports of inspector, (10) 254
cleaning appliances, (11) 254
obliteration of stamps, (12) 254–257
procedure on reverification, (13) 257
existing appliances, (14) 257
maker's marks, (15) 258
novel appliances, (16) 258
strength of appliances, (17) 258
denomination, indication of, (18) 239
plugs for stamps, (19) 259
design, date of stamp, (20) 259
stamping measures on dealer's premises, (21) 259
instructions by authorities, (22) 259
cases of doubt, (23) 260
exemption as to appliances used for explosives, (24) 260
MEASURES OF LENGTH, 260, 261
examination of, (25) 260
verification of, (26) 261
pull on tape measures, (27) 261
errors, (28) 261, (I.) 297
stamping, (29) 261
LIQUID MEASURES OF CAPACITY, 262–265
examination of, (30) 262
rims and tilting, (31) 262
publicans' measures, (32) 263
milk measures, (33) 263
taps, (34) 263

* The numbers in brackets in ordinary type denote the Regulations, those in Roman figures the Tables.

REGULATIONS OF BOARD OF TRADE—*continued.*
LIQUID MEASURES OF CAPACITY—*continued.*
glass measures, (35) 263
marking and denominations, (36) 264
apothecaries' measures, (37) 264, (III.) 298
verification, (38) 264
reading subdivisions, (39) 265
errors, (40) 265, (II.) 297, (III.) 298
stamping, (41) 265
graduated metal measures, (42) 265
DRY MEASURES OF CAPACITY, 266–268
examination,
materials of, and handles, (43) 266
form of, (44) 266
metal bands on wooden measures, (45) 266
marking denomination on, (46) 266
one denomination only, (47) 266
verification, (48) 267
errors permissible, (49) 267, (IV.) 299
stamping, (50) 267, 268
WEIGHTS, 268–271
metal, but not lead, (51) 268
cased weights, allowances for, (52) 268
maker's name or trade mark on, (53) 268
forms of avoirdupois weights allowed, (54) 269
material of other weights, (55) 269
prohibition of stamping, (56) 269
adjusting holes, (57) 270
sizes of holes, etc., (58) 270
errors permissible, (59) 271, (V., VI., VII., VIII.) 299–308
stamping, (60) 271, 272
WEIGHING INSTRUMENTS, 272 *et seq.*
General, 272–274
sensitiveness of vibrating instruments, (61) 272
testing for error, (62) 272
in cases not tabulated, (63) 272
test on level plane, (64) 273
maker's name and mark of capacity, (65) 273
prohibition of removable hooks, (66) 273
knife edges and bearings, (67) 273
poises, mode of testing, (68) 274
removable parts, (69) 274
interchangeable and reversible parts, (70) 274
graduations, (71) 274

REGULATIONS OF BOARD OF TRADE—*continued.*
BEAM SCALES, 274–277
definition of, (72) 274
classification of, (73) 274, (XIII., XIV.), 304
making of (74), 275
instruments in special trades, 276
examination of, 276
swan-neck ends, allowances for, (76) 276
loaded weight pans, and wooden scale boards, (77) 276
adjusting apparatus, (78) 276
verification, 276
mode of testing, (79) 276
loading of pans, (80) 276
errors permissible, (81) 276, (XIII., XIV.) 304
stamping, (82) 277
COUNTER MACHINES, 277–279
definition of, (83) 277
accelerating machines, (84) 277
rigidity of structure, (85) 277
adjusting contrivance, (86) 278
sliding or tare weight prohibited, (87) 278
verification, 278
fall allowed, (88) 278
movement of knife edges, (89) 278
testing goods pan, (90) 278
scoop, (91) 279
errors permissible, (92) 279, (XV.) 305
stamping, (93) 279
SPRING BALANCES, 279–281
suspension of, (94) 279
index finger, (95) 280
graduations on, (96) 280
limits of, (97, 98) 280
adjustable indicator, (99) 281
verification, mode of, (100) 281
graduations—recovery, (101) 281
errors permissible, (102) 281, (XV.) 395
stamping, (103) 283
STEELYARDS, 282, 283
examination and allowances, (104) 282
material and forms allowed, (105) 282
verification, (106) 283, (XV., XVI.) 305
stamping, (107) 283
DEAD WEIGHT MACHINES, 283–285
definition and classification, (108) 283
examination, mode of, (109) 284

REGULATIONS OF BOARD OF TRADE—*continued.*
DEAD WEIGHT MACHINES—*continued.*
balancing materials, (110) 284
verification, (111) 284
errors permissible, (112) 284, (XVI.) 305
stamping, (113) 285
PLATFORM MACHINES AND WEIGH-BRIDGES, 285–288
examination of, (114) 285
steelyards, (115) 285
movable hutches, etc., (116) 286
portable coal machines, (117) 286
balancing arrangements, (118) 286
general requirements, (119) 287
verification, (120) 287
limits of error, tests for, (121) 288
relieving gear, (122) 288
error and sensitiveness, (123) 288, (XVI., XVII.) 305–306
stamping, (124) 288
dating counterpoises, (125) 288
CRANE MACHINES, 288, 289
examination of, (126) 288
balancing adjustment, (127) 289
tested on maker's premises, (128) 289
hydraulic machines, (129) 289
verification, (130) 289
limits of error, (131) 289
stamping, (132) 289
AUTOMATIC MACHINES, 290, 291
definition of, (133) 290
examination and verification, (134) 290
limits of error allowed, (135) 290
stamping, (136) 291
PRICE COMPUTING WEIGHING INSTRUMENTS, 291
examination and verification, (137) 291
stamping, (138) 291
METRIC WEIGHTS, MEASURES, AND INSTRUMENTS, 292
errors allowed—marking—shape—temperature, (139) 292, (IX. to XII) 301–303
TABLES:
A. Outdoor Inspection, etc., 293
B. Indoor Verification, etc., 294, 295
C. Abbreviations of Denominations, 296
Permissible Errors, 297–306
I. Imperial measures of length, 207
II. capacity, 297

REGULATIONS OF BOARD OF TRADE—*continued.*
TABLES—*continued.*
III. Imperial apothecaries' measures, 298
IV. dry measures of capacity, 299
V. avoirdupois weights, 299
VI. troy bullion weights, 300
VII. Apothecaries' weights, 300
VIII. Grain weights, 301
IX. Metric measures of length, 301
X. capacity, 302
XI. Metric cubic measures, 303
XII. Metric weights, 303
WEIGHING INSTRUMENTS,
XIII., XIV. Beam scales, 304
XV. Counter machines, spring balances, 305
XV. and XVI. Steelyards, 305
XVI. Platform, etc., machines, 305
XVII. Weigh-bridges, 306

RENTS AND TOLLS, 181
meaning of, in Scotland, 185

REPEAL of Acts before 1878, 181, 195
savings as to, 195, 229

RESTAMPING in City of London, 217
in new district, 171, 172
of old articles, 196
when stamp worn out, 160
See REGULATIONS.

RESTORATION of standards, 144

REVENUE, defrauding the, 352–354

RIDER, definition of, 41

ROBERVAL BALANCE, 43–48
essentials for accuracy, 45, 48
sources of error, 46, 48
testing, 49
simple test for accuracy, 50, 55

ROD and ROOD, definition of, 147

SALE of bread or coal: *see* BREAD and COAL.
by apothecaries' weight, 151
by avoirdupois weight, 151
by bulk, 137, 150, 188
by foreign measures, etc., 137, 150
by the glass, 150
by local weights or measures, 150
by long weight, 150
by metric standards, 150
by price, 137, 154
in Ireland, 188
by Troy weight, 151
by unstamped weight or measure, 153, 161
by weight or measure, 149
by weight, what is? 188, 332
in Ireland, 187
in markets, 210, 365 *et seq.*
in vessel, 152
of false instruments, 159
weights and measures, 162, 247
in Ireland, 391
of forged stamped articles, 162, 247
of unjust instruments, 159
of weights, by inspector, 214

SAVINGS, for civil remedy, 227
for corporation of Dublin, 230
for indictments, etc., 227
for repeals, 229

SCALE BEAMS, 22

SCALES, 22
conditions for accuracy, 38–42
for bread-shop, 335
for use of officers of local authority, 212
money weight, 90, 334
ornamental ends, 135
sensitiveness of, 26, 31
stability of, 29, 32
testing, 38–42
chemists' scales, 138
with interchangeable pans, 40, 159
See BALANCES.

SCHEDULES, construction and effect of, 181

SCOTLAND, appeals in, 186
application of Acts to, 185–187, 219
local authorities in, 207, 377
powers of commissioners, 346
entry, 350
inspector, 350
police, 350
procedure in, 185, 351
sale of bread, 350
coal, 140, 346–349
grain, hay, etc., 349
intoxicating liquors, 364

SECOND OFFENCE, limit as to, 279

SEIZURE, in Scotland, 351
things liable to, 136
when authorized, 173
See also INSPECTOR.

SENSITIVENESS of balance, 26–28, 31
effect of an error of level, 39
meaning of, 42
of weigh-bridge, 77

SHERIFF, power of (Scotland), 187

SHILLING, weight of, 201

SHORT WEIGHT,
in coal, 141, 219–221
in markets, 210
in Scotland (bread and made-up parcels), 350, 351
offence under Merchandise Marks Act, 381–383

SILVER, sale by weight, 151

SIXPENCE, weight of, 201

SOVEREIGN, weight of, 201

SPECIFIC GRAVITY, 105
standards for, 107, 220

SPECIAL REGULATIONS of local authority, 132

SPRING BALANCES, 95
sale of unjust, 159

STABILITY of balance, 29, 32

STABLE EQUILIBRIUM, definition of, 19, 20

STAMP, forged or counterfeit, 162, 211
frauds in Irish market, 390
obliteration of: *see* REGULATIONS.
removing, 163
worn out, 160

STAMPING, 134, 159–163, 171
churns, 137, 157
coin weights, 162, 166, (I. 51) 321
definition of, 184
delicate balances, 138
denominations, 159
district, for another, 135, 176
fees for, 134
See FEES.
regulations for: *see* REGULATIONS.
measures, 159
worn-out stamp, 160

STANDARDS, Board of Trade, 144, 198–203
custody of, 127, 143, 164
denominations of, 198–203
apothecaries' measures, 199
apothecaries' weights, 200
avoirdupois weights, 199
decimal grain weights, 200
gauges, 198
of capacity, 199
of density, 212
of length, 198
of metric system, 145, 146
of temperature, 212
troy bullion weights, 200
errors allowed in local, 397
for coin weights, 145, 201
for electricity, 128, 212
gallon, how ascertained, 148, 199
imperial: *see* IMPERIAL STANDARDS.
local: *see* LOCAL STANDARDS.
metric: *see* METRIC STANDARDS.
multiple of, 167
Parliamentary copies, 126, 144
pound, imperial, 143, 144, 147, 196
restoration of, 144
verification of, 164
working, 131, 212
yard, what is, 143, 144, 146, 196

STANDARDS OFFICE, fees taken at, 396, 397

STEELYARDS, principle of, and testing, 11, 59 *et seq.*
pumping of, 66
reversible, 61
testing, 65
various forms of, 61–65
on weigh-bridges, 69, 70, 85
forces acting on, 76, 77
sliding poises, 80–87
testing, 66, 80
Regulations, (104–107) 282, (T. XV. XVI.) 305

STERE, definition, 122

STONE, definition of, 148

STRAW, etc.,
sale of, in Scotland, 349

SUB-INSPECTORS R.I.C., duties of, 193

SUMMARY JURISDICTION : *see* LEGAL PROCEEDINGS.

SURFACE, measures of, 147

TAPS, stamping measuring taps, (R. 34) 263

TEA, weighing, 155, 158

TEMPERATURE, absolute, 108
conversion of scales of, 101
definition of, 99
effect of, on standards, 147
measurement of, 101
standards for, 100, 212

TENDER of amends, 180

TENSION and weight, 16

TESTING balances with fixed pans, 53
chemists' balances, 138
coal-weighing appliances, 225
French balance, 57, 58
inverted balances, 53, 54
measures of capacity, 115
by plungers, 113, 114

TESTING—*continued.*
of patterns, 243
regulations as to, 241
See REGULATIONS.
scales, 38–42
self-indicating machines, 90–94
sensitiveness of scales, 42
steelyards, 65
weigh-bridges, 78

THERMOMETERS, descriptions of, 104

TICKET for coal, 235

TOLLS in imperial measure, etc., 149
in markets and fairs, 371

TON, definition of, 148
metric equivalent, 123, 206

TRADE, custom of, 156, 158
definition of, 149, 151
See also USE FOR TRADE.

TRADE DESCRIPTION, false, 383

TRANSFERRING stamp: *see* FORGERY.

TROY WEIGHT, denominations of, 200
metric equivalents for, 206
ounce, definition of, 148
sale by, 151

UNAUTHORIZED WEIGHT OR MEASURE, forfeiture of, 153
penalty for possession of, 153

UNIFORMITY of weights and measures, 143

UNJUST INSTRUMENTS, 135, 153
coal "barrows" are not, 155
coin weights, 162
decision of Court as to, 156
definition of, 39
defrauding revenue by, 253, 254
examples as to, 155
forfeiture of: *see* FORFEITURE.
forged stamp on, 162
local custom, 156
manufacture of, 159

UNJUST INSTRUMENTS—*continued.*
measures, 153
paper bags, use of, 155
question of fact for justices, 156
sale of, 159
scales with adjustments, 155
spring balance, 159
spring luggage machine, 155
unjust against seller, 135
used in trade, 153
by excise trader, 352–354
weigh-bridge, 154

UNSTABLE EQUILIBRIUM, definition of, 19, 20

UNSTAMPED ARTICLES, forfeiture of, 136, 153
penalties for, 160, 211
worn-out stamp, 160

USE FOR TRADE, 137
amendment of conviction, 157
beer barrels in, 137, 161
bulk, sale in, allowed, 137, 150
checking delivery of bread, 161
iron at foundry, 153
produce in manufactory, 151
churns, 137, 157
definition of, 149, 153
evidence of, 174, 179
excess luggage, weighing, 155
false instruments, 154 : *see* FALSE BALANCES.
market stamp (Ireland), 390
gill, one-third of, as a measure, 146, 153
glass, sale by the, 150
imperial weights and measures, 149, 153
exception as to foreign markets, 150
local measures, when lawful, 150
sale by "glass," 150
Sutherland stone, 150
ton long weight, 150
not while manufacturer's property, 157
possession for, what is? 174, 179
post-office scales, 157
unauthorized weight or measure, 153
unstamped instruments, when the makers, 157
measures, when legal, 153
possession of, penalty, 160

USE FOR TRADE—*continued.*
water meters, 161
weight of wrappers, 158
worn-out stamps, 160

VACUO, weight in: *see* WEIGHT.

VEHICLE, definition of, 228

VERIFICATION, 159–163
Board of Trade regulations as to, 240
See REGULATIONS.
fees for: *see* FEES.
inquiry as to procedure in, 213
method of, by inspector, 170
of coin weights, 162, 166
of gas standards, 216
of local standards, 131, 133, 167
See LOCAL STANDARDS.
of metric local standards, 211
of standards and copies, 164–167
of weighing instruments, 210
stamp of, 160, 170

VESSEL, sale in containing, 152

VIBRATING INSTRUMENTS, accuracy of, 38–42
description of, 20
See REGULATIONS.

VOLUME, how tested, 113

WAGES, instruments to check, 140, 329, 330

WARRANT, general, for entry, 135, 173

WATER, boiling point of, 100
freezing point of, 100
weight of, 97, 148

WATER BAROMETER, description of, 99

WATER METER, 161

WEIGH-BRIDGES and platform machines, 66–78
Beranger's principle in, 71
levers under platform, 77
magnetisation error, 89, 90
sensitiveness, 77
steelyards: *see* STEELYARDS.
testing, 78: *see* REGULATIONS.
nature of errors, 79
sliding poises, 85–87
use of balance ball, 74, 154
forms of, 75, 76, 88
testing, 88, 89
See AUTOMATIC MACHINES; WEIGHING INSTRUMENTS.

WEIGHING of bread: *see* BREAD, 332
coal: *see* COAL.
definition of, 5, 6
excise trader, by, 352
in Ireland, 188
in vacuo, 110, 115
markets and fairs, in: *see* MARKETS.
method of, for great accuracy, 35–38
of coin, 162, 166
police, by (Scotland), 351
rider, with, 41

WEIGHING INSTRUMENTS,
automatic, 90–94
testing, (R. 133–136) 290
bread, for sale of, 335
breweries, in, 352
certificate of suitability, 243
coal, for: *see* COAL.
definition of, 228
erection of, 222, 346
factories, in, 330
fees for verifying, 234
forfeiture of unjust, 136, 153, 212
forged stamp on, 211
markets and fairs, in, 209, 366
mills, in, 376
mines, in, 329
paper, use of, 155
public departments, of, 139, 157
police stations, at (London), 344
spirit dealers', 352

WEIGHING INSTRUMENTS—*continued.*
stamping of, 210
See REGULATIONS.
unjust to seller, 135
verification of, 210
fees for, 234
wilful fraud in using, 158

WEIGHING MACHINES: *see* WEIGHING INSTRUMENTS.

WEIGH-MASTERS, supply of scales to (Ireland), 209

WEIGHT, defined, 1, 2
absolute and relative, 6
air, in, 7; in air and water, 108
apparent, 7
atmosphere, of the, 98
brass, why used, 110
certificate of suitability, 243
direction of action of, 4, 7
errors in local standards, 397
false description as to, 383
fees for stamping, 232
foreign weights, use of, 150
in vacuo, 6
is a force, 1, 5
measures matter, 2, 4, 5
of coins, 162, 166, 201
of water, 97, 148
proportional to acceleration, 4
mass, or matter, 2, 4, 5
relative weight, 6
re-stamping of, 135, 143
sale of bread by, 332
sale of coal by, 218, 340
stamping, 134, 159
fees for, 232
See REGULATIONS.
standard of, 5, 6
See STANDARDS.
use of imperial weights in trade, 149
in Ireland, 187, 188
variation of, 6, 7

WEIGHTS, ETC., ACTS, limit and objects of the, 137, 150

WESTMINSTER Court of burgesses, 183, 217

WHITWORTH GAUGES, 198

WINE, sale by measure (Ireland), 365

WORKING STANDARDS, 131, 212

WORKSHOPS, application of Acts to, 140, 330

YARD, imperial standard, 143, 146, 196
metric equivalent, 121, 205

THE END.

PRINTED BY WILLIAM CLOWES AND SONS, LIMITED, LONDON AND BECCLES.

The most concise and simple set of books yet issued; containing all necessary information without being loaded with superfluous columns. Suitable for Boroughs and Counties.

WEIGHTS AND MEASURES ACTS,

1878 to 1904.

Account Books & Forms

UNDER THE

Board of Trade Regulations, 1907.

Specially designed to meet the requirements of the Local Government Board Auditors, and to contain, in a concise and ready form, all the information necessary for compiling the Annual Returns to the Board of Trade.

Published by—

CHARLES KNIGHT & Co., Ltd.,

227-239, TOOLEY STREET, LONDON, S.E.

Under Table B (Verification).

		s.	d.
1.	**Certificates of Verification** (in books of 100, duplicate leaves). Weights, Measures, and Instruments fully classified according to Table; showing number verified, stamped, adjusted and condemned, and with columns for insertion of fees for stamping, charges for adjusting, &c., in approved form. Arranged and grouped to correspond with "Verification Book" ...	*6	0
2.	**Verification Book** (based upon, and corresponding with the "Certificate"); supplying in a clear and ready form the		

information required for Table B, including the Abstract of Fees. The whole particulars of each Verification is contained in one line, thus obviating duplicate entries and references. Fully classified according to Table, and grouped to meet the requirements of Local Government Board Auditors. Half bound ... ... (100 leaves) 32 6
(200 ,,) 45 0

2A. **Condemned, or Rejected, Weights, &c. Notice to Owners,** under Instruction 34. Pocket size, 8-in. by 4-in. ... (In books of 100, duplicate leaves) *4 0

(Forms 2A and 5 are essential evidence in prosecutions, and should be used in every instance where Weights, Measures, and Weighing Instruments are condemned or rejected, or require adjustment or repair.)

NOTE.—In reply to several enquiries, it may be stated that the adjusting charges specified in the "Certificate" and "Verification Book" are grouped in accordance with the Board of Trade Memorandum.

Under Table A (Inspection).

3. **Inspection Book,** to contain the information required for Table A. Fully classified according to the Table, and with additional columns shewing weights, &c. incorrect, unstamped, and seized, and recording inspections under Coal Byelaws, Sale of Bread Acts, Coal Mines Regulation Act, Market and Fairs Acts, &c. Half bound ... ... (100 leaves) 14 0

4. **Inspector's Note Book** (8-in. by 4-in. for the pocket); ruled to correspond with the "Inspection Book," and containing the Official Stamp Numbers for the purpose of Instruction 23. Indispensable for out-door work ... (100 leaves) *4 0

5. **Notice to Traders** to have Weights, &c. corrected (8-in. by 4-in., pocket size, duplicate leaves) under Regulation 12. (In books of 100 in duplicate) *4 0

6. **Register of Traders,** and Record of Visits, with Notes as to Weights, &c. to be adjusted. Half bound (100 leaves) 10 6
(200 ,,) 12 6

7. **Particulars of Prosecutions.** (Table A.) Half bound ... ... (In books of 50 leaves) 9 6
(,, 100 ,,) 11 6

8. **Record of Standards Book.** (Instructions 10 & 11). Containing a Record of Local Standards and Balances, Quarterly Examination of Standards and Equipment, and Half-Yearly Verification of Working Standards. Half bound 18 0

(Forms 8A, B, C, D, E, and F divided by projection.)

9. **Working Diary** 7 6

*** SPECIAL PRICES FOR LARGE QUANTITIES.**